SECTION J

FRONT SUSPENSION

3·8 "E" TYPE GRAND TOURING MODELS

INDEX

INDEX *(continued)*

FRONT SUSPENSION

DESCRIPTION

The right and left hand front suspension units are comprised of the upper and lower wishbones to which are attached the stub axle carriers, the torsion bars and the hydraulic dampers.

The torsion bars are attached at their forward end to the lower wishbones and at the rear end to brackets secured to the chassis frame.

Each torsion bar is controlled by a telescopic direct acting hydraulic damper.

The top of each damper is attached to brackets formed on the forward chassis assembly; the bottom of the damper being bolted to the lower wishbone.

The upper wishbone is a one piece forging secured to the threaded fulcrum shaft by means of pinch bolts through clamps formed on the wishbone inner mounting. The fulcrum shaft is mounted on two rubber/steel bonded bushes.

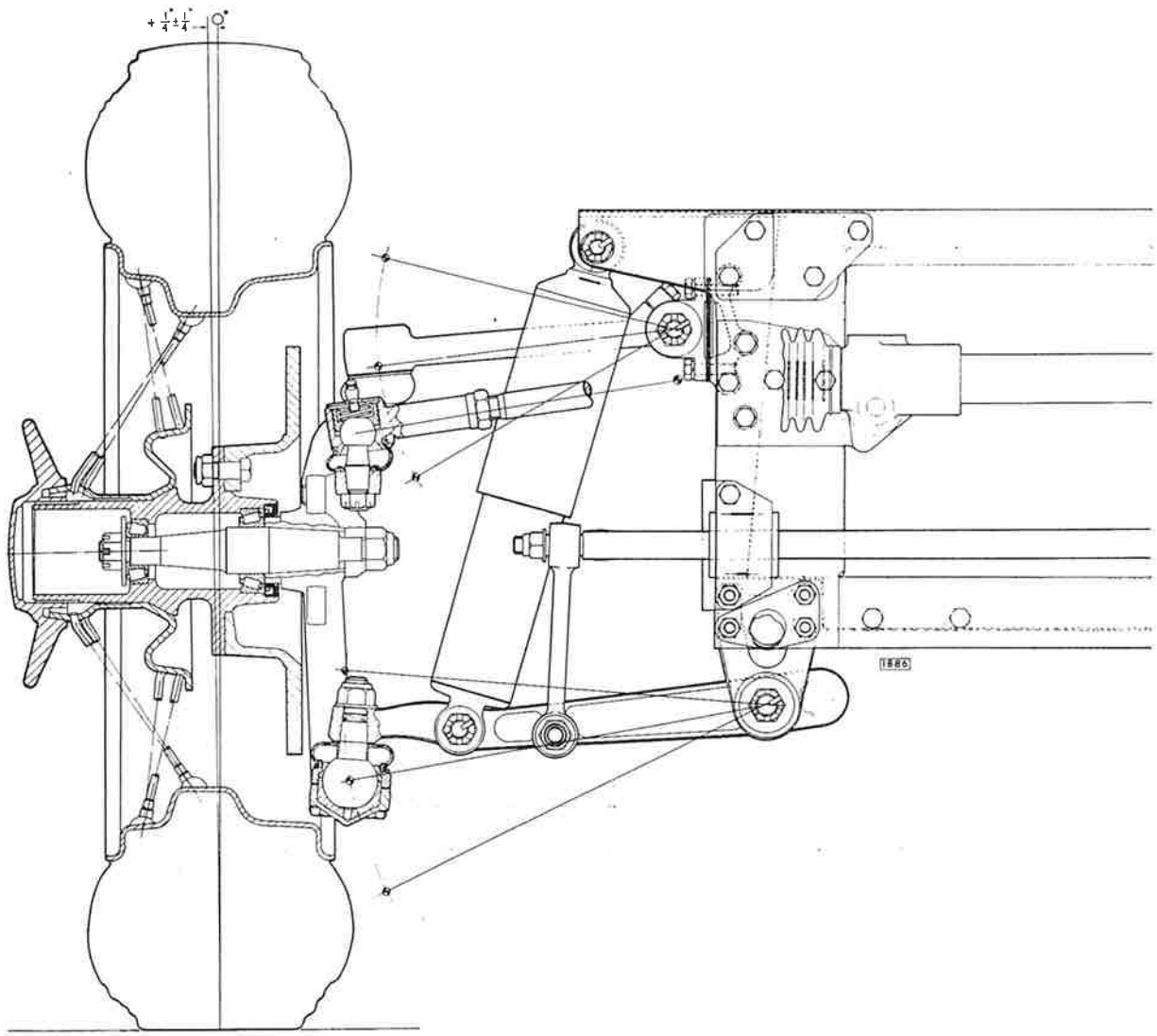

Fig. 1. The front suspension assembly.

The outer ends of the wishbone carry the upper wishbone ball joint which is in turn secured to the hub carrier by the tapered shank of the ball pin and a locknut.

The lower wishbone is a two piece assembly the inner ends of which are mounted at the fulcrum shaft end on rubber/steel bonded bushes.

The outer end of the lower wishbone is secured to the lower wishbone ball joint by the tapered shank of the ball pin and a locknut.

An anti-roll bar fitted between the lower wishbones is attached to the chassis front member by rubber insulated brackets.

The wheel hubs are supported on two tapered roller bearings, of which the inner races fit on a shaft located in a tapered hole bored in the stub axle carrier.

DATA

Type	Independent torsion bars
Dampers	Telescopic hydraulic
Castor Angle	$1\frac{3}{4}° \pm \frac{1}{4}°$ positive
Camber Angle	$\frac{1}{4}° \pm \frac{1}{4}°$ positive
Swivel inclination	4°

ROUTINE MAINTENANCE

Wishbones and Anti-Roll Bar

The front suspension wishbone levers and the anti-roll bar are supported on rubber bushes which do not require any attention.

Front Hydraulic Dampers

The front hydraulic dampers are of the telescopic type, and no replenishment with fluid is necessary or provided for.

EVERY 2,500 MILES (4,000 KM.)

Wheel Swivels

Lubricate the nipples (four per car) fitted to the top and bottom of the wheel swivels. The nipples are accessible from underneath the front of the car. Lack of lubrication at these points may cause stiff steering.

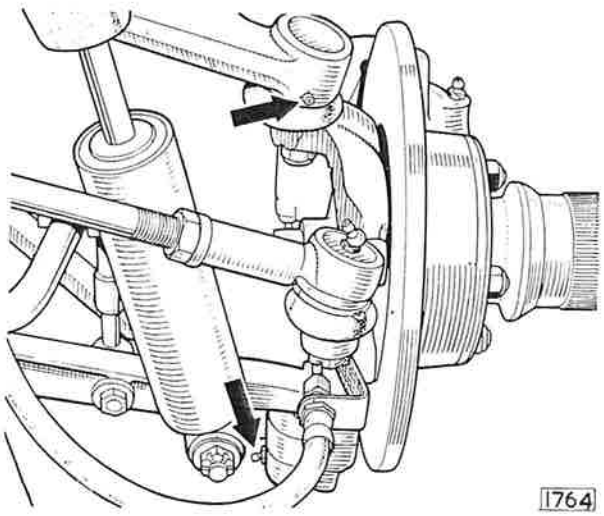

Fig. 2. The steering swivel grease nipples.

FRONT SUSPENSION

EVERY 10,000 MILES (16,000 KM.)

Wheel Bearings

Removal of the wheels will expose a grease nipple in the wheel bearing hubs. Lubricate sparingly with the recommended grade of lubricant. Always thoroughly clean the grease nipple before applying grease gun. An indication that sufficient grease has been applied is by the escape of grease past the outer hub bearing which can be observed through the bore of the splined hub.

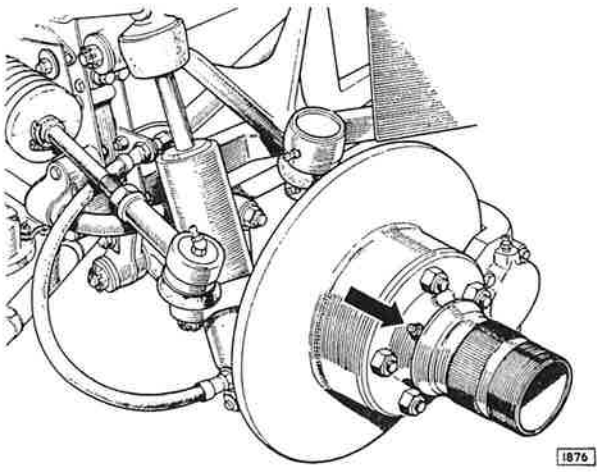

Fig. 3. The front wheel bearing grease nipple.

Recommended Lubricants

Component	**Mobil**	**Castrol**	**Shell**	**Esso**	**B.P.**	**Duckham**	**Regent** Caltex/Texaco
Front Wheel Bearings	Mobilgrease MP	Castrolease LM	Retinax A	Esso Multi-purpose Grease H	Energrease L2	LB10	Marfak All purpose
Wheel Swivels	Mobilgrease MP	Castrolease LM	Retinax A	Esso Multi-purpose Grease H	Energrease L2	LB10	Marfak All purpose

FRONT SUSPENSION ASSEMBLY—DISMANTLING

It is not advisable to attempt to remove the right hand and left hand front suspension assemblies as complete units. The various components should be removed as separate items.
To dismantle proceed as follows.

UPPER WISHBONE

Removal

Slacken off, but do not remove the hub caps from the road wheels; the hub caps are marked "RIGHT (OFF) SIDE" and "LEFT (NEAR) SIDE" and the direction of rotation to remove, that is, clockwise for the right hand side and anti-clockwise for the left hand side.

Place the jack under the lower wishbone fulcrum support bracket and raise the car until the wheels are clear of the ground.

Place a stand under the wishbone fulcrum rear support bracket.

Complete the removal of the road wheels.

Do NOT place the jack or stands under the forward frame cross tubes.

Remove the self-locking nut and drift out the upper wishbone ball joint from the stub axle carrier, into which it is a taper fit, by tapping on the side face of the carrier adjacent to the pin.

Remove the two bolts, nuts and lock washers retaining the fulcrum shaft rear carrier bracket to the chassis frame.

Identify and remove the shims fitted between the bracket and the chassis frame, and the stiffener plate located behind the two nuts on the inner face of the frame member.

Note: DO NOT confuse the shims with this stiffener plate when refitting the bracket.

Remove the three setscrews and lock washers retaining the fulcrum shaft front carrier bracket to the chassis frame.

Identify and remove the shims fitted between the bracket and the chassis frame.

Remove the upper wishbone.

Extract the split pins and unscrew the nuts retaining the brackets to the fulcrum shaft. Withdraw the brackets and rubber bushes. Note the relative positions of the shims removed from the front and rear brackets as these control the camber angle.

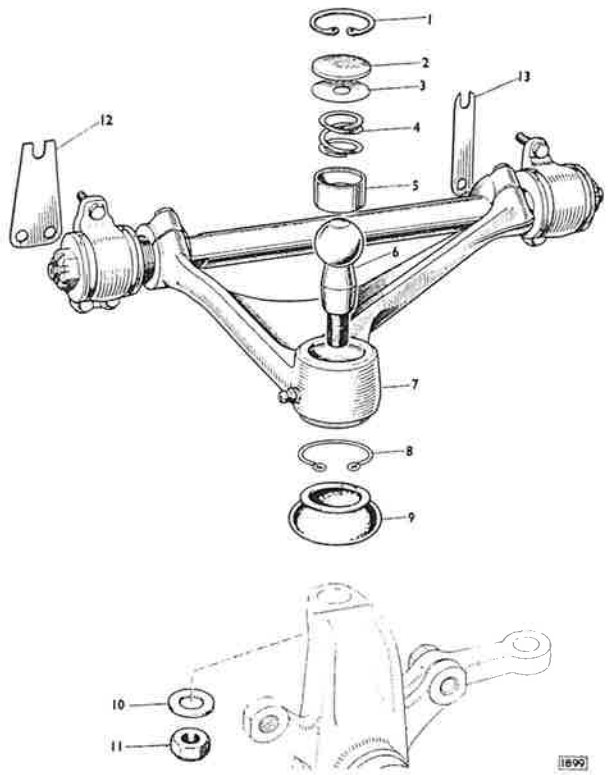

Fig. 4. The upper wishbone and ball pin.

1. Circlip
2. Top cover
3. Shims
4. Socket spring
5. Ball pin socket
6. Ball pin
7. Upper wishbone
8. Circlip
9. Rubber gaiter
10. Washer
11. Nut
12. Camber shims (front carrier bracket)
13. Camber shims (rear carrier bracket)

Note: When carrying out the above operation do not allow the flexible brake hose to become extended. Tie up the axle carrier to the frame member.

Refitting

The refitting of the upper wishbone assembly is the reverse of the removal procedure, but the slotted nuts at each end of the fulcrum shafts must not be tightened until the upper wishbone assembly has been fitted and the full weight of the car is on the suspension. Omitting to carry out this procedure will result in undue torsional loading of the rubber bushes with possible premature failure.

Note: Check the ball joint rubber gaiter (9). Replace if worn or damaged.

Check the castor and camber angles after refitting upper wishbone as described on pages J.17 and J.18.

FRONT SUSPENSION

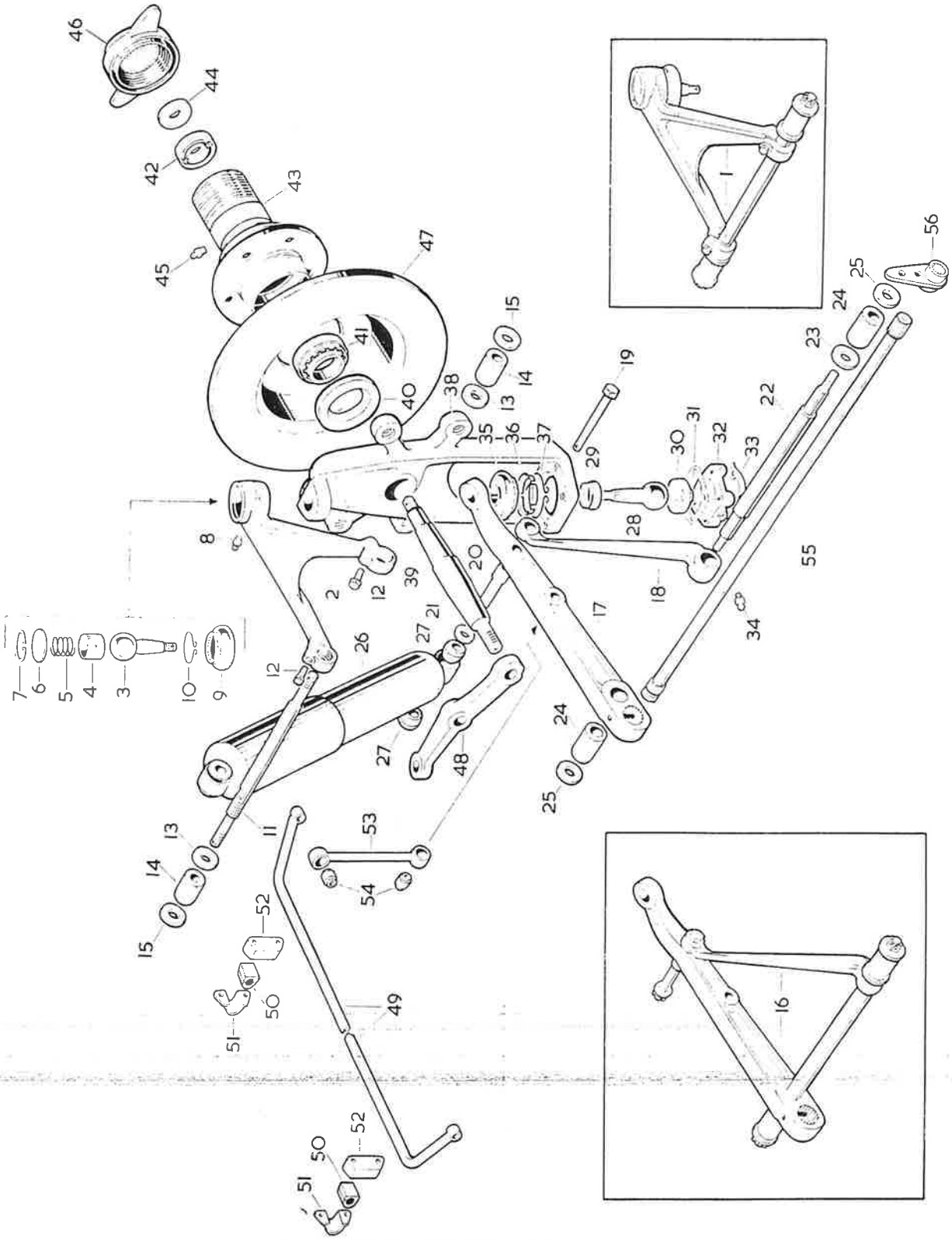

Fig. 5. Exploded view of the front suspension assembly.

1. Upper wishbone assembly (Right-hand)
2. Upper wishbone (Right-hand)
3. Upper wishbone ball pin
4. Ball pin socket
5. Spring
6. Top cover
7. Circlip
8. Grease nipple
9. Rubber gaiter
10. Clip
11. Upper wishbone fulcrum shaft
12. Pinch bolt
13. Distance washer
14. Rubber bush (Upper wishbone)
15. Special washer
16. Lower wishbone assembly (Right-hand)
17. Lower wishbone lever (Right-hand front)
18. Lower wishbone lever (Right-hand rear)
19. Bolt
20. Sleeve
21. Washer
22. Lower wishbone fulcrum shaft
23. Distance washer
24. Rubber bush (lower wishbone)
25. Special washer
26. Shock absorber (front)
27. Shock absorber (bottom bush)
28. Lower wishbone ball pin
29. Ball pin spigot
30. Morganite socket
31. Shims
32. Lower ball pin cap
33. Tab washers
34. Grease nipple
35. Rubber gaiter
36. Gaiter retainer
37. Clip
38. Stub axle carrier
39. Stub axle
40. Oil seal
41. Inner bearing
42. Outer bearing
43. Front hub (Right-hand)
44. "D" washer
45. Grease nipple
46. Hub cap
47. Brake disc
48. Steering arm
49. Anti-roll bar
50. Rubber bush
51. Bracket
52. Distance piece
53. Anti-roll bar link
54. Rubber bush
55. Torsion bar
56. Bracket—torsion bar (rear end)

IMPORTANT

It is essential that the top wishbone ball pin is not allowed to come into hard contact with the sides of the ball socket. When testing the movement of the ball in its socket, move the ball only in the direction of the elongation.

If the top wishbone is removed complete with the stub axle carrier the assembly must not be held by the top wishbone and the axle carrier allowed to swing on the ball pin.

Removal of the Fulcrum Shaft

Release the two clamp screws locking wishbone to fulcrum shaft. Turn shaft in a clockwise direction, looking from the rear, until the threaded portion of the shaft is clear of the wishbone. Withdraw the shaft through the wishbone arms.

Adjustment of the Ball Joint

The correct clearance of the ball pin in its socket is ·004″ (·10 mm.).

Shims for the adjustment of the ball joint are now available in ·004″ (·10 mm.) thicknesses.

To adjust the ball pin clearance to the correct figure, Fig. 4, remove the circlip (1), cover plate (2) and spring (4) from the ball joint. Clean thoroughly all the component parts.

Fit shims (3) between cover plate (2) and upper ball socket (5) until the ball is tight in its sockets when the cover plate and circlip are refitted without the spring.

Remove shims to the value of ·004″ (·10 mm.) and re-assemble ball joint complete with the spring, when it should be possible to move the ball pin by hand.

Finally lubricate with the recommended lubricant.

Note: Shims should not be added to take up excessive wear in the ball pin and sockets; if these parts are badly worn replacements must be fitted.

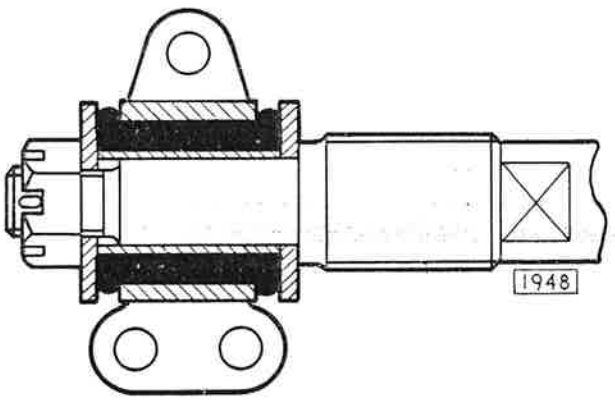

Fig. 6. Section through one of the upper wishbone rubber/steel bushed mounting brackets.

Renewing the Rubber/Steel Bushes

Drift or press out the bush from the bracket. Press the new bush into the bracket ensuring that the bush projects from each side of the bracket by an equal amount. Fitting of the bush will be facilitated if a lubricant made up of twelve parts of water to one part of liquid soap is used.

LOWER WISHBONE

Removal

Slacken off but do not remove the hub caps from the road wheels; the hub caps are marked "RIGHT (OFF) SIDE" and "LEFT (NEAR) SIDE" and the direction of rotation to remove, that is, clockwise for the right hand and anti-clockwise for the left hand side. Make up a block of hard wood to fit into the frame lower cross tube section as shown in Fig. 7.

Remove the cable harness band clips from the cross tube and insert the block of wood under the cross tube; place the jack under the wooden block and raise the car until the road wheels are clear of the ground.

Place stands under the blocks at the two outer ends of the cross tube adjacent to the lower wishbone fulcrum pivots. Complete the removal of the road wheels. Do NOT place the jack or stands under the frame cross tube without the wooden block inserted.

Disconnect the hydraulic brake pipe from the frame connection, remove the brake pipe carrier brackets and blank off the connector to prevent ingress of dirt or loss of fluid.

Remove the split pin and nut from the steering tie rod ball joint and drift out the tie rod end from its tapered seating in the steering arm by tapping on the side face of the steering arm adjacent to the ball pin.

Disconnect the upper wishbone ball joint as described on page J.7. If it is not required to remove the upper wishbone completely for servicing raise the wishbone to its full extent and tie to the frame.

Disconnect the lower wishbone ball joint by removing the self-locking nut and drifting out the ball pin from its tapered seating in the lower wishbone. Remove the axle carrier complete with the brake caliper and disc. Place the jack under the lower suspension arm and raise the jack to take up the weight of the car.

Note: Do not lift the car off the stands.

Remove the self locking nut retaining the anti-roll bar to the lower suspension arm.

Remove the split pin and nuts retaining the telescopic damper to the frame and the wishbone, extract the upper mounting bolt and withdraw the damper.

Lower and remove the jack. Unscrew the two bolts and lock washers securing the torsion bar rear adjuster lever to the frame and slide the lever forward until it is clear of the torsion bar splines.

Remove the locking bolt from the torsion bar front mounting. Slide the torsion bar rearwards until the front splines are clear of the wishbone and withdraw in a forward direction.

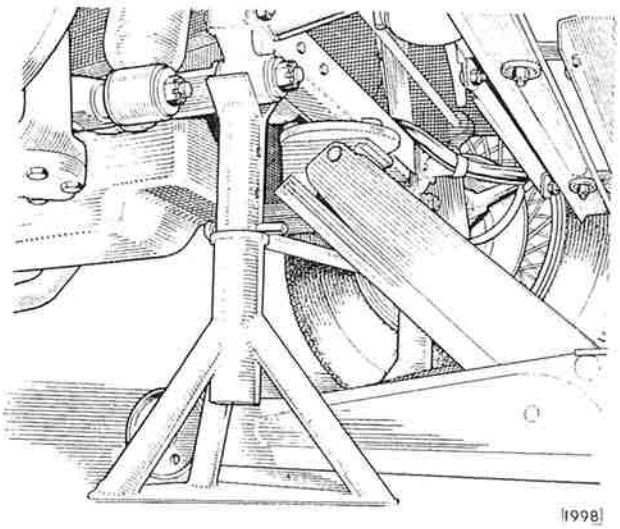

Fig. 7. Showing the front of the car jacked up under the front cross member; note the piece of hardwood which must first be inserted in the member. If only one front wheel is to be raised, the jack can be placed at the front end of the lower wishbone fulcrum shaft at the point where the stand is in position.

Remove the two bolts and washers retaining the fulcrum shaft rear carrier to the chassis frame.

Remove the four bolts, nuts and washers retaining the fulcrum shaft front carrier bracket to the chassis frame. Extract the split pin and remove the nuts from the lower wishbone shaft. Withdraw the brackets and rubber bushes.

Refitting

Refitting of the lower wishbone assembly is the reverse of the removal procedure, but it will be necessary to reset the torsion bar as described under "Torsion Bar—Adjustment" page J.15. Check the lower wishbone ball joint for clearance as described under "Lower Wishbone Ball Joint".

Examine the ball joint rubber gaiter. Replace if worn or damaged.

The slotted nuts at each side of the fulcrum shaft must not be tightened until the complete front suspension assembly has been fitted and the full weight of the car is on the suspension. Omitting to carry out this procedure will result in undue torsional loading of the rubber bushes with possible premature failure.

It will be necessary to re-bleed the front hydraulic brakes after refitting the lower wishbone assembly as described in Section L "Brakes".

Renewing the Rubber/Steel Bushes

Drift or press out the bush from the bracket. Press the new bush into the bracket so that the bush projects from each side of the bracket by an equal amount. Fitting of the bush will be facilitated if a lubricant made up of twelve parts of water to one of liquid soap is used.

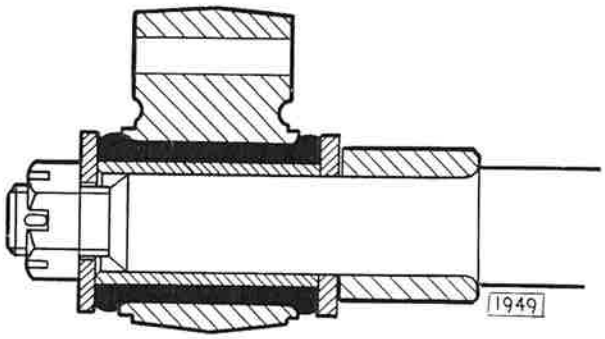

Fig. 8. Section through one of the lower wishbone rubber/steel bushed mounting brackets.

LOWER WISHBONE BALL JOINT

Dismantling

Release the wire clip (4, Fig. 9) and remove the rubber gaiter (3).

Tap back the tab washers (11) and unscrew the four setscrews (12) securing the ball pin cap (9) to the stub axle carrier.

Remove the cap (9), shims (8), ball pin socket (7), and ball pin (6).

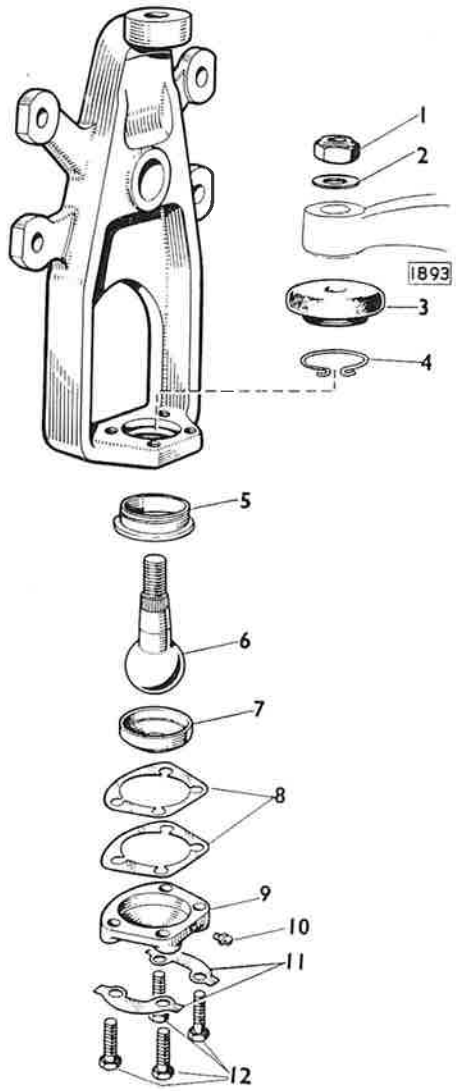

Fig. 9. The lower wishbone ball joint.

1.	Nut	7.	Socket
2.	Washer	8.	Shims
3.	Rubber gaiter	9.	Ball pin cap
4.	Circlip	10.	Grease nipple
5.	Spigot	11.	Tab washers
6.	Ball pin	12.	Setscrews

Re-assembling

Re-assembling is the reverse of the dismantling procedure but, if necessary, re-shim the ball joint to obtain the correct clearance of ·004″ to ·006″(·10 mm. to ·15 mm.).

Note: Shims should not be removed to take up excessive wear in the ball pin and sockets; if these parts are badly worn, replacements should be fitted.

Adjustment of the Ball Joint

The correct clearance of the ball pin in its socket is ·004″ to ·006″(·10mm. to ·15mm.). Shims for adjustment of the ball joint are available in ·002″ (·05 mm.) and ·004″ (·10 mm.) thicknesses. To adjust the ball pin clearance to the correct figure, remove the shims one by one until, with the ball cap fully tightened, the ball is tight in its sockets. Fit shims to the value of ·004″ to ·006″ (·10 mm. to ·15 mm.) which should enable the shank of the ball pin to be moved by hand.

STUB AXLE CARRIER

Removal

Jack up the car and remove the road wheels as described under "Upper Wishbone—Removal" Page J.7.

Disconnect the hydraulic brake pipe from the frame connection, remove the brake pipe carrier and blank off the connector to prevent ingress of dirt and loss of fluid.

Remove the self-locking nut and plain washer securing the upper wishbone ball joint to the stub axle carrier. Drift out the ball from its tapered seating, by tapping on the side face of the carrier adjacent to the pin.

Raise the wishbone to its full extent and tie back to frame.

Remove the split pin and nut from the steering tie rod ball joint and drift out the tie rod end from its tapered seating by tapping on the side face of the carrier adjacent to the pin.

Remove the self-locking nut and plain washer securing the lower wishbone ball joint to the stub axle

carrier. Drift out the ball pin from its tapered seating by tapping on the side face of the lower wishbone adjacent to the ball pin.

Remove the axle carrier.

Refitting

Refitting is the reverse of the removal procedure. It will be necessary to bleed the front hydraulic brakes system after refitting the axle carrier and suspension arms as described in Section L "Brakes".

WHEEL HUBS

Removal

Jack up the car and remove the road wheel. Disconnect the flexible hydraulic brake pipe from the frame connection and blank off the connector to prevent the ingress of dirt and loss of fluid.

Remove the locking wire from the two brake caliper mounting bolts and unscrew the bolts noting the shims fitted between the caliper and the mounting plate. Remove the caliper. Remove the split pin, (2, Fig. 10), retaining the hub nut; holes are provided in the side of the hub through which the split pin can be withdrawn. Remove the slotted nut (1) and plain washer (3) from the end of the stub axle shaft. The hub can now be withdrawn by hand.

Dismantling

Extract the oil seal (8). Withdraw the inner races of the taper roller bearings (7). Examine bearing for wear. If new bearings are to be fitted the outer races can be drifted out from the hub.

Refitting

Refitting is the reverse of the removal procedure but it will be necessary to re-lubricate the bearings as detailed in "Routine Maintenance" at the beginning of this section and adjust the end float of the hub bearings as described in the following paragraph.

When refitting the brake caliper care should be taken to ensure that the correct clearances are maintained between the inner faces of the caliper and each face of the brake disc. For method of checking the clearance and tolerance permissible refer to Section L "Brakes". Re-bleed the hydraulic brakes after refitting as described in Section L "Brakes".

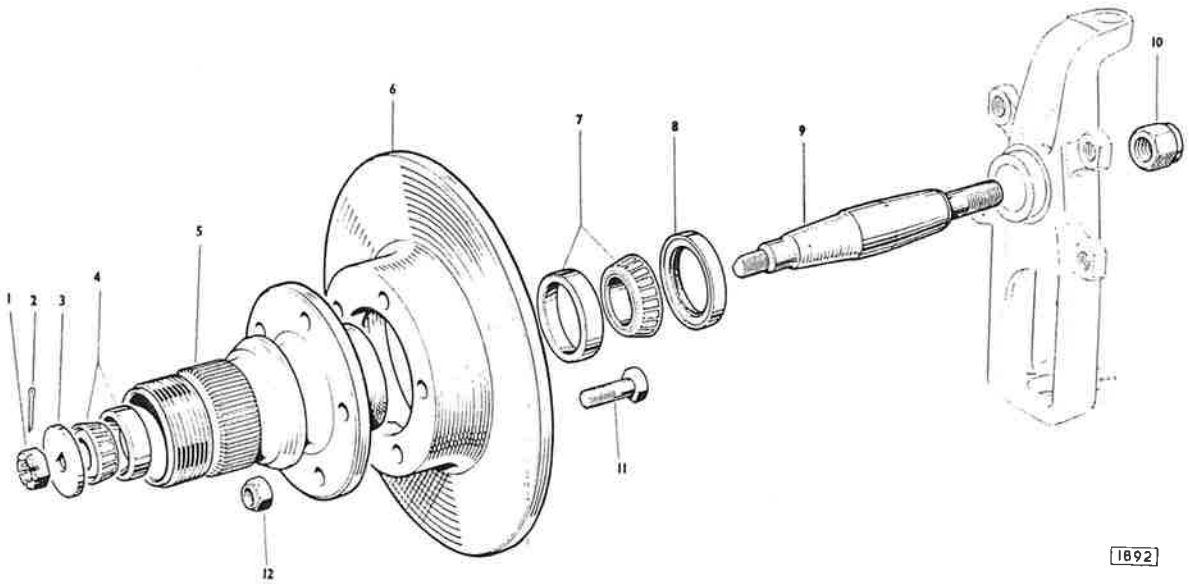

Fig. 10. The front hub.

1. Nut
2. Split pin
3. "D" washer
4. Outer bearing
5. Wheel hub
6. Brake disc
7. Inner bearing
8. Oil seal
9. Stub axle
10. Stub axle securing nut
11. Brake disc securing bolt
12. Nut

Bearing End-float Adjustment

The correct end float of the wheel bearings is ·003″ to ·005″ (·07 mm. to ·13 mm.). It is particularly important that the end float does not exceed ·005″ (·13 mm.) otherwise the brakes may tend to drag and not function correctly.

The wheel bearing end float can be measured with a dial indicator gauge, mounted with the plunger against the hub. If a gauge is not available proceed as follows:

Tighten the end nut until there is no end float, that is, when rotation of the hub feels slightly "sticky".

Slacken back the hub nut between one and two flats depending on the split pin hole relative to the slots in the nut.

HYDRAULIC DAMPERS

The telescopic hydraulic dampers are of the sealed type with no provision for adjustment or "topping-up" with fluid, therefore, in the event of a damper being unserviceable a replacement damper must be fitted.

Before fitting a damper to the car it is advisable to carry out the following procedure to "bleed" any air from the pressure chamber that may have accumulated due to the damper having been stored in a horizontal position.

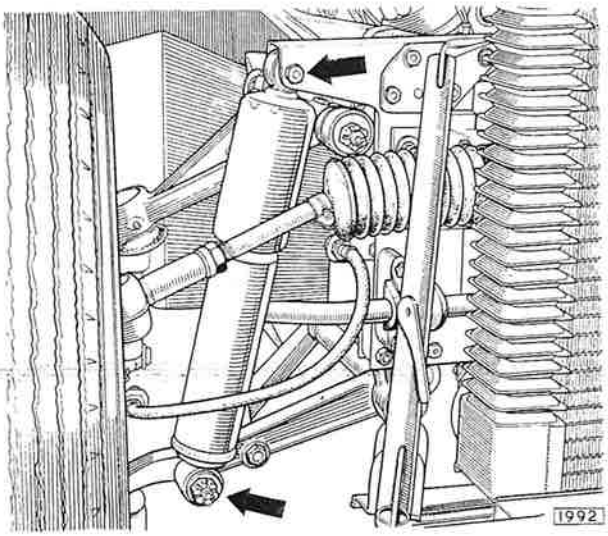

Fig. 11. The hydraulic damper attachment points.

Hold the damper in its normal vertical position with the shroud uppermost and make several short strokes (not exceeding more than half-way) until there is no lost motion and finish by extending the damper to its full extent once or twice. Do not extend the damper fully until several short strokes have been made first. After the operation of "bleeding" the hydraulic dampers should be kept in their normal upright position until they are fitted to the car.

IMPORTANT

If the hydraulic damper is to be removed do not allow the suspension unit to drop lower than the normal rebound position, otherwise the top ball joint may "neck" in its housing.

Support the outer end of the lower wishbone before removing the damper.

Removal

Jack up the car under the lower wishbone at a point adjacent to the damper lower mounting until the wheels are clear of the ground.

Remove the road wheel.

Remove the split pin and nut from the damper top and bottom mounting bolts.

Remove the top mounting bolt, withdraw the damper from the bottom mounting and remove from the car.

Refitting

Refitting is the reverse of the removal procedure, but the slotted nuts should not be tightened until the full weight of the car is on the suspension. Omitting to carry out this procedure will result in undue torsional loading of the rubber bushes with possible ultimate failure.

ANTI-ROLL BAR

Removal

Remove the four bolts, nuts and washers from the anti-roll bar support brackets (51, Fig. 5) on the chassis member. Withdraw the two distance pieces.

Remove the self-locking nuts and withdraw the two bolts attaching the arm to the lower wishbone. To separate the anti-roll bar (49) from the link arm (53), remove the self-locking nuts and the washers and withdraw the two bolts. The anti-roll bar bracket rubbers are split to enable them to be removed from the anti-roll bar.

Renewing the Link Arm Bushes

Drift or press out the bushes from the link arm upper and lower eyes. Press the new bush into the eye ensuring the bush projects from each side by an equal amount. The fitting of the bush will be facilitated if a lubricant made up of twelve parts of water to one part of liquid soap is used.

Refitting

Refitting is the reverse of the removal procedure. It is most important when attaching the support bracket to the frame member and also when tightening the self-locking nuts on the link arm attachment bolts to have the full weight of the car on the suspension. Omitting to carry out this procedure will result in undue torsional loading of the rubber bushes with possible premature failure.

TORSION BAR—ADJUSTMENT

Checking

Check that the car is full of petrol, oil and water. If not additional weight must be added to compensate for, say, a low level of petrol (the weight of 10 gallons of petrol is approximately 80 lbs. (36·0 kg.)). Before any check on torsion bar setting is made the car must be placed on a perfectly level surface, wheels in the straight ahead position and tyre pressures correctly adjusted to:

Front 23 lbs. per sq. in. (1·62 kg./cm.^{2})

Rear 25 lbs. per sq. in. (1·76 kg./cm.^{2})

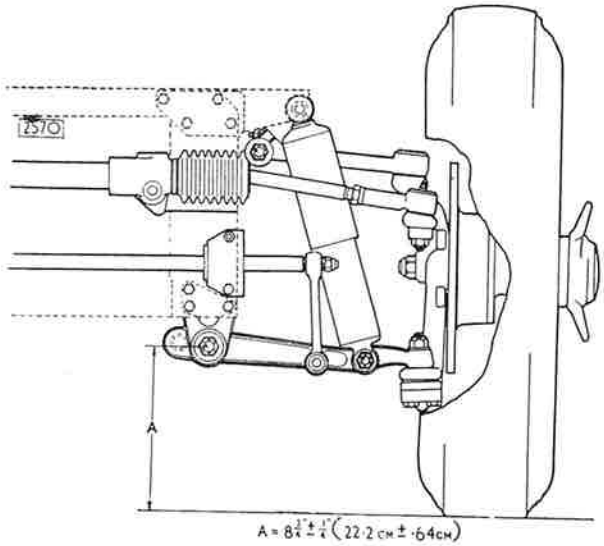

Fig. 12. Showing the method of checking the standing height.

Roll car forward three lengths.

With the torsion bar correctly adjusted the measurement A should be $8\frac{3}{4}'' \pm \frac{1}{4}''$ (22·2 ± ·64 cm.).

Adjustment

If adjustment is necessary proceed as follows.

Jack up the car and place stands under the lower wishbone fulcrum support bracket.

Note: DO NOT place jack or stand immediately under the forward frame tubes.

Remove the road wheels.

Disconnect the upper wishbone ball joint from the stub axle carrier, as described on page J.7.

Disconnect the steering tie-rod ball joint from the stub axle carrier as described on page J.12.

Disconnect the anti-roll bar as described on page J.15.

Place the jack under the lower wishbone at a point adjacent to the damper lower mounting. Raise jack but do not lift the car off the stands.

Remove the split pins and slacken the nuts retaining the lower wishbone rubber mountings.

Remove the hydraulic damper as described on page J.14. Lower the jack.

Remove the two bolts and nuts securing the torsion bar rear adjuster lever to the frame. Fit setting gauge, with two holes drilled at $17\frac{13}{16}''$ (45·24 cm.) centres to damper mounting points to position lower wishbone.

Note: The setting gauge can be easily made using Fig. 13 as a reference.

The two holes in the torsion bar rear adjuster lever and the corresponding holes in the frame should now be in line. If holes are not in line adjustment must be made as follows:

(i) Note which way lever requires to be rotated to bring holes in line. Mark position of the lever on shaft, remove by sliding off the splines, turn in direction required, and locate on fresh splines. Check lever position.

(ii) Repeat operation if further adjustment is necessary. It should be noted that the rear end of the torsion bar has 25 splines whereas the front end has only 24 splines. This permits the bar to be used as its own vernier and allows for a very fine adjustment. If this very fine adjustment is necessary slide torsion bar out of front splines after first removing the locking bolt.

Turn in direction required and engage fresh splines.

If position of lever is now correct refit rear bolts and nuts, also front locking bolt and nut and fully tighten.

Remove the setting gauge and locate damper on lower mounting.

Raise jack until damper upper retaining bolt will pass through bracket and damper eye. Refit nuts but do not tighten. Refit top wishbone steering tie-rod and anti-roll bar.

Repeat operation to left hand side.

Refit road wheels, jack up car, remove stands and lower car.

Tighten damper securing nuts and insert split pins. Tighten lower wishbone fulcrum shaft nuts and insert split pins. Tighten nuts securing anti-roll bar.

Roll car forward three lengths and re-check standing height of car which should now be as shown in Fig. 12.

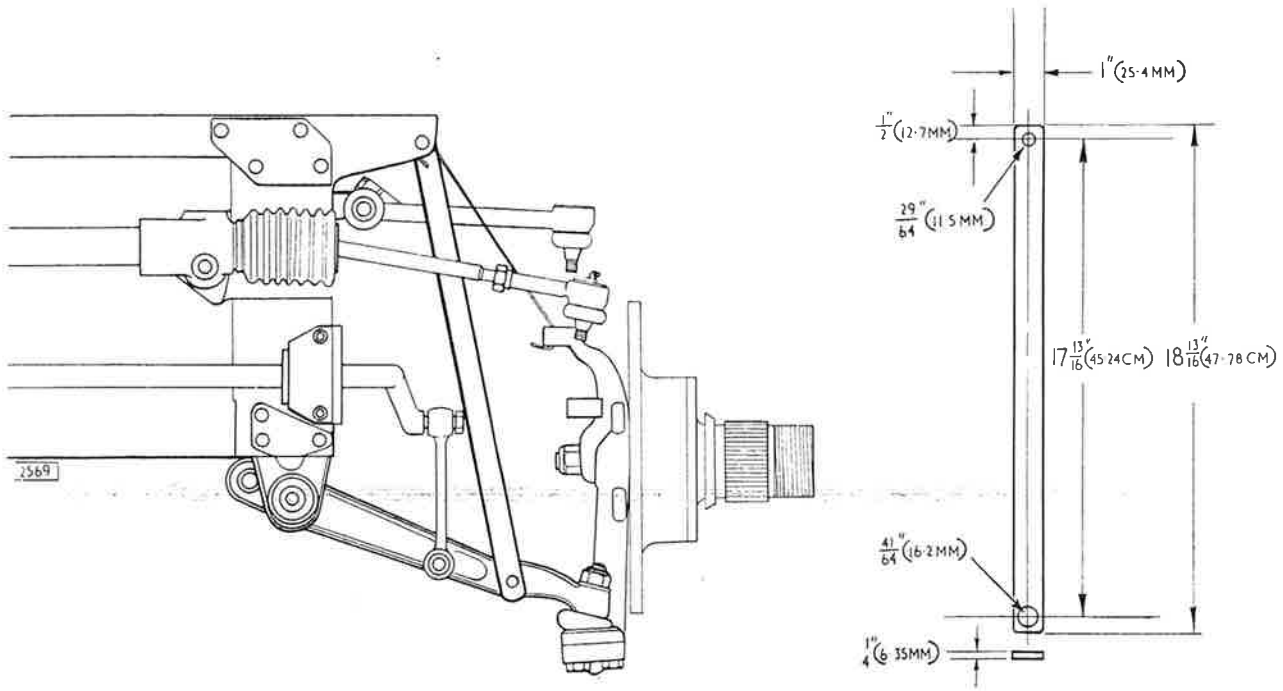

Fig. 13. The torsion bar setting gauge.

CASTOR ANGLE—ADJUSTMENT

Check that the car is full of petrol, oil and water. If not, additional weight must be added to compensate for, say, a low level of petrol (the weight of 10 gallons of petrol is approximately 80 lbs. (36·0 kg.)). Ensure that the tyre pressures are correct and that the car is standing on a level surface.

Using an approved gauge check the castor angle.

Castor angle $0° \pm \frac{1}{2}°$ positive.

Note: The castor angle for each wheel must not vary by more than $\frac{1}{4}°$.

Adjustment is effected by rotating the round threaded shaft on the front suspension upper wishbone bracket.

Remove the split pins and release the nuts situated at the rear and front of the fulcrum shaft and release the wishbone clamping bolts. The shaft may now be turned with a spanner placed on the two flats provided on the shaft.

Note: It is essential that the split pins be removed and the nuts released from the shaft otherwise a strain will be placed on the rubber mounting bushes.

To increase positive castor angle rotate the shaft anti-clockwise (viewed from the front of the car).

To decrease positive castor angle rotate the shaft clockwise. After adjustment retighten the clamp bolts.

The slotted nuts situated at the front and rear of the fulcrum shaft should not be tightened until the full weight of the car is on the suspension. Omitting to carry out this procedure will result in undue torsional loading of the rubber bushes with possible ultimate failure. Refit split pins.

The front of the car should be jacked up when turning the wheels from lock to lock during checking.

If any adjustment is made to the castor angle, the front wheel alignment should be checked and if necessary reset as described in Section I "Steering".

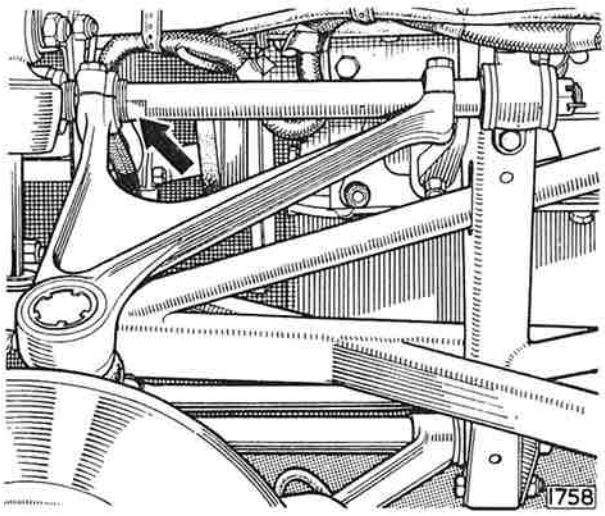

Fig. 14. The castor angle is adjusted by rotating the shaft indicated by the arrow.

FRONT SUSPENSION

CAMBER ANGLE—ADJUSTMENT

Check that the car is full of petrol, oil and water. If not additional weight must be added to compensate for, say, a low level of petrol (the weight of 10 gallons of petrol is approximately 80 lbs. (36·0 kg.)).

Ensure that the tyre pressures are correct and that the car is standing on a level surface. Camber Angle $\frac{1}{2}° \pm \frac{1}{2}°$ positive. The camber for each wheel must not vary by more than $\frac{1}{4}°$.

Line up the front wheel being checked parallel to the centre line of the car.

Using an approved gauge check the camber angle. Rotate the wheel being checked through 180° and re-check.

Adjustment is effected by removing or adding shims to the front suspension top wishbone bracket at two points, namely, the front and rear of the bracket.

The top holes in both front and rear shims are slotted and the bolts need only be slackened off to remove or add shims. The bottom holes are not slotted and it is necessary to remove bracket fixing bolts completely.

Inserting shims increases positive camber angle; removing shims increases negative camber angle or decreases positive camber angle. Remove or add an equal thickness of shims from each position otherwise the castor angle will be affected.

It should be noted the $\frac{1}{16}''$ (1·6 mm.) of shimming will alter the camber by approximately $\frac{1}{4}°$.

Check the other front wheel in a similar manner. If any adjustment is made to the camber angle the front wheel alignment should be checked and if necessary be re-set as described in Section I "Steering".

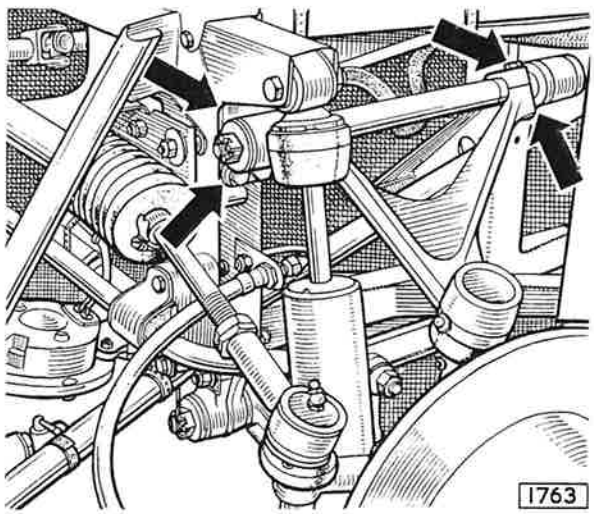

Fig. 15. The camber angle is adjusted by means of shims indicated by the arrows. Remove or add an equal thickness of shims from each position.

ACCIDENTAL DAMAGE

The following dimensional drawings are provided to assist in assessing accidental damage. A component suspected of being damaged should be removed from the car, cleaned off, the dimensions checked and compared with those given in the appropriate illustration.

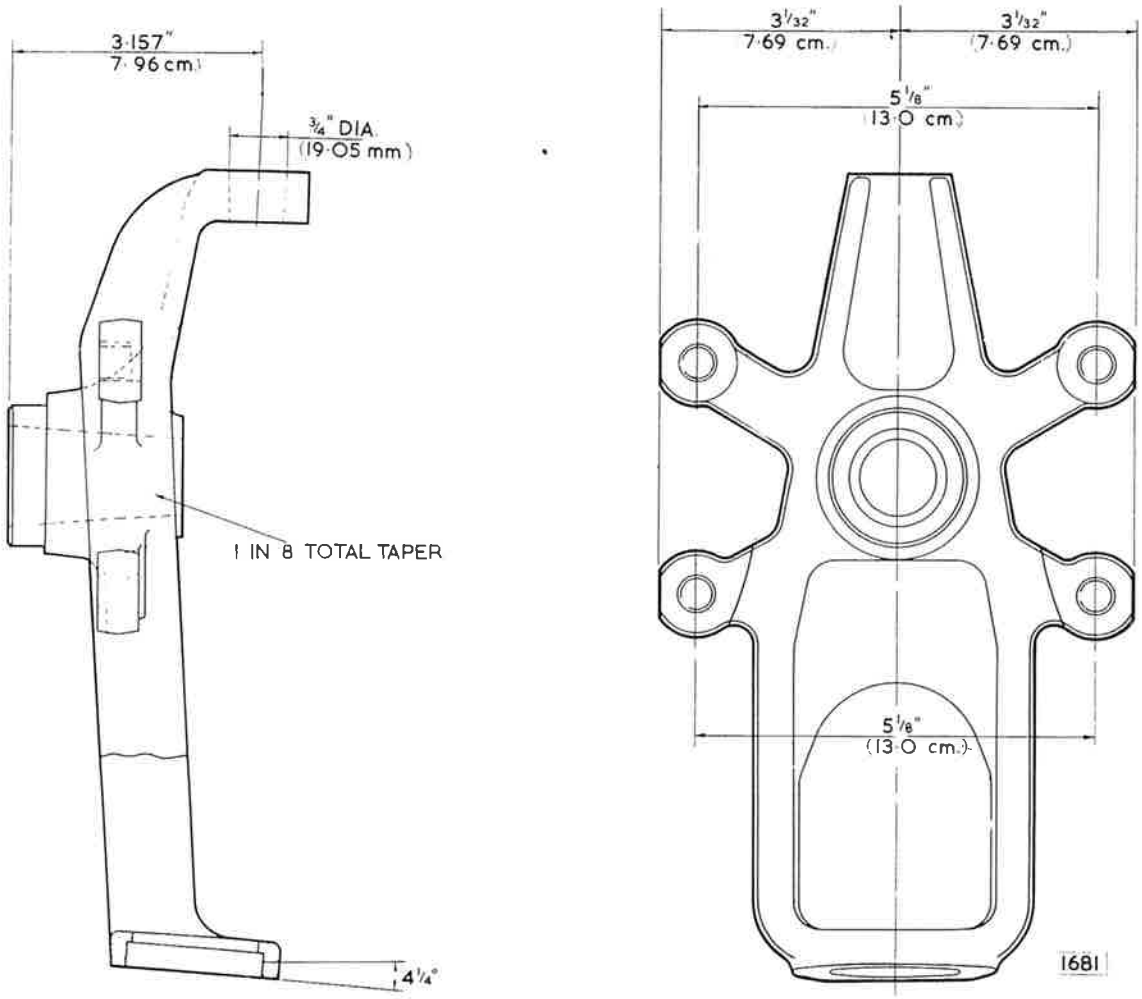

Fig. 16. The stub axle carrier.

FRONT SUSPENSION

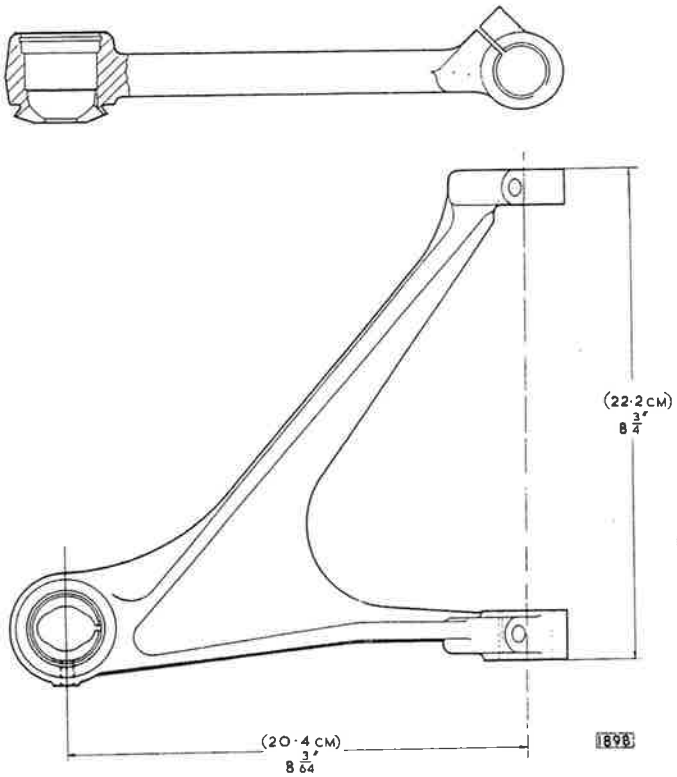

Fig. 17. The upper wishbone.

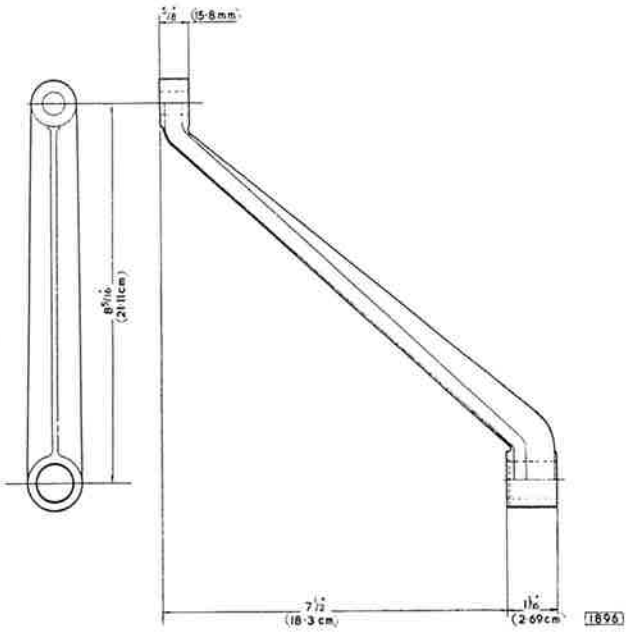

Fig. 18. The lower wishbone lever—rear.

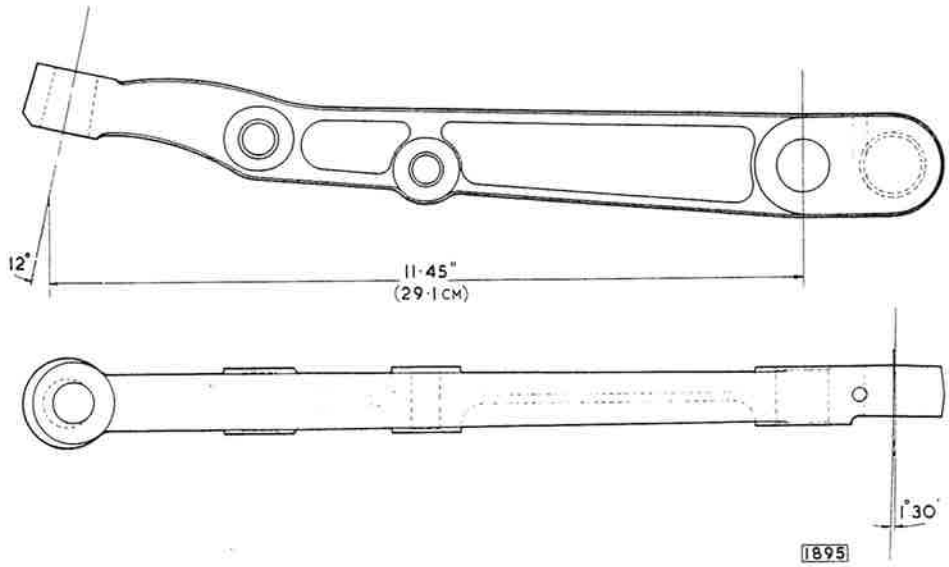

Fig. 19. The lower wishbone lever—front.

Printed in England by Buckler & Webb Ltd., Church Street, Birmingham 3

SECTION K

REAR SUSPENSION

3·8 "E" TYPE GRAND TOURING MODELS

INDEX

REAR SUSPENSION

Description

The rear wheels are located in a transverse plane by two tubular links of which the top link is the half shafts universally jointed at each end. The lower link is pivoted at the wheel carrier and at the crossbeam adjacent to the differential casing. To provide maximum rigidity in a longitudinal plane the pivot bearings at both ends of the lower link are widely spaced. The suspension medium is provided by four coil springs enclosing telescopic hydraulic dampers, two being mounted on either side of the differential casing. The complete assembly is carried in a fabricated steel crossbeam. The crossbeam is attached to the body by four "Vee" rubber blocks and is located by radius arms. The radius arm pivots are rubber bushes mounted on each side of the car between the lower link and a mounting point on the body structure.

An anti-roll bar fitted between the two lower wishbones, is attached to the underframe side members by rubber insulated brackets.

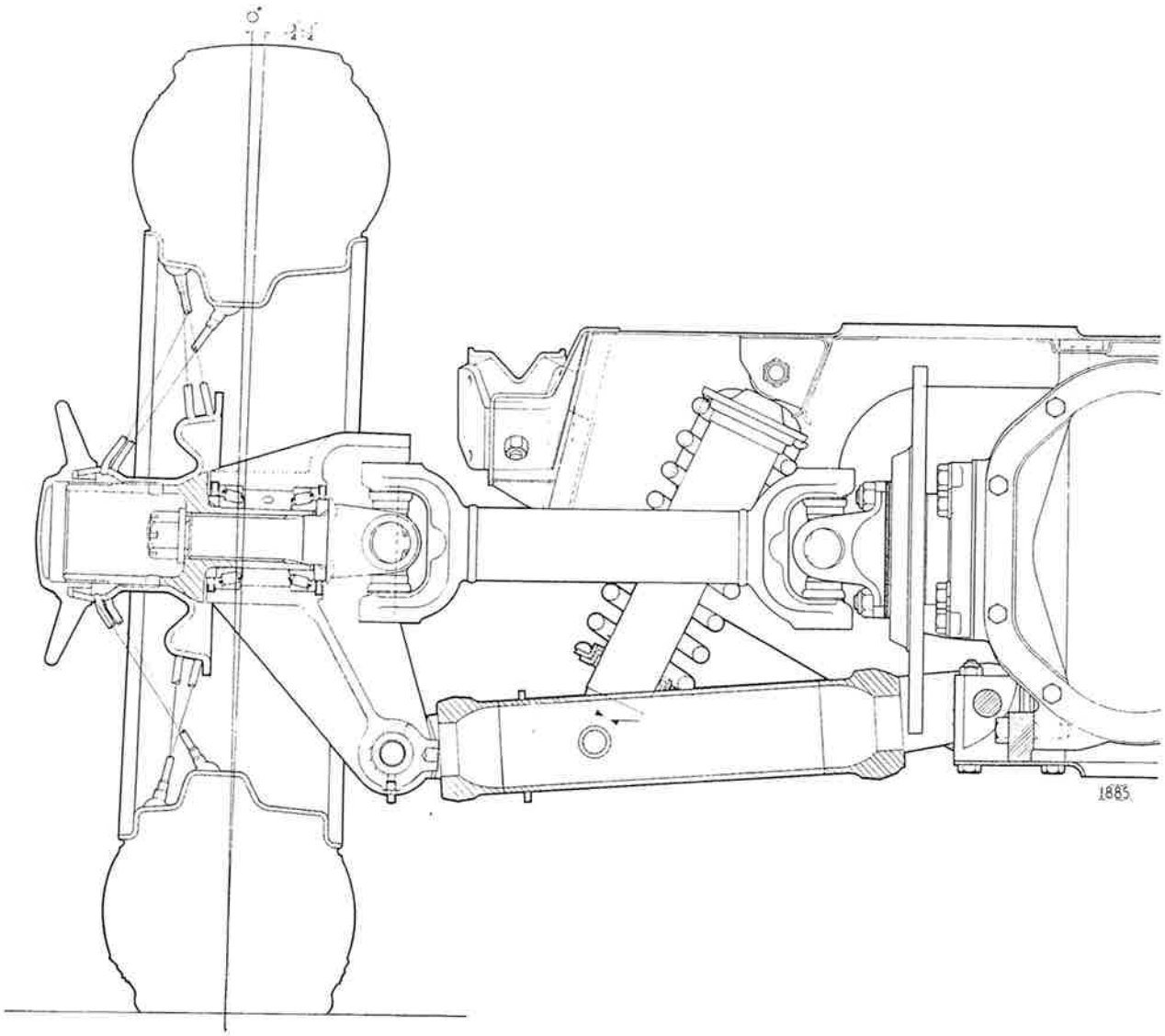

Fig. 1. Sectioned view of rear suspension

REAR SUSPENSION

DATA

	Early Cars	Later Cars
Rear Road Spring		
Free length (approx.)	10·1″ (25·65 cm.)	10·5″ (26·67 cm.)
Number of coils (approx.)	$9\frac{3}{8}$	10
Wire diameter	·432″ (11·0 mm.)	
Identification colour	—	Red
Dampers	Telescopic	
Road Wheel Movement from mid laden position		
Full bump	$3\frac{1}{8}$″	
Full rebound	$3\frac{1}{8}$″	
Track	$50\frac{1}{4}$″	
Rear Wheel Camber	$\frac{3}{4}$° ± $\frac{1}{4}$° negative	

Special tools	Churchill Tool No.
Rear road spring removal tool	J.11
Dummy shaft for wishbone fulcrum points (2 off)	J.14

ROUTINE MAINTENANCE

EVERY 5,000 MILES (8,000KM.)

Wishbones

Lubricate the wishbone lever pivots. Three grease nipples are provided on each wishbone, see Fig. 2.

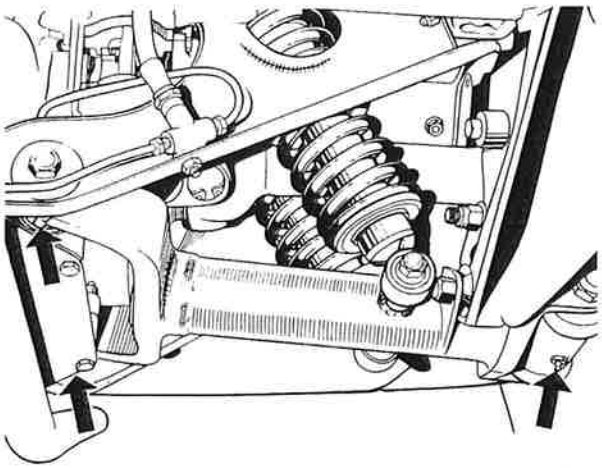

[1788]

Fig. 2. Outer and inner pivot bearing grease nipples

Recommended Lubricants

	Mobil	Castrol	Shell	Esso	B.P.	Duckham	Regent Caltex/Texaco
Wishbone Pivots	Mobilgrease MP	Castrolease LM	Retinax A	Esso Multi-purpose Grease H	Energrease L2	LB10	Marfak All purpose

REAR SUSPENSION

Removal

Slacken the two clamp bolts which secure the tail pipes to the silencers.

Remove the two nuts, bolts and washers securing the exhaust tail pipes to the centre mounting point under the rear of the body.

Withdraw the exhaust tail pipes.

Detach the radius arms at the front end.

Place a stout piece of wood approximately 9" × 9" × 1" (22·8 cm. × 22·8 cm. × 25·4 mm.) between the rear suspension tie plate and the jack.

Jack up the rear of the car and place two chassis stands of equal height under the body forward of the radius arm mounting posts. Place blocks of wood between the chassis stands and the body to avoid damage.

Remove the rear road wheels.

Leaving the jack in position under the differential tie plate remove the two self locking nuts and bolts securing the anti-roll bar links to the roll bar.

Disconnect the flexible brake pipe at the connection on the body.

Remove the split pin, washer and clevis pin securing the handbrake cable to the handbrake caliper actuating levers mounted on the suspension cross beam.

Slacken the locknut and screw the outer handbrake cable screw out of the adjuster block.

Remove the four bolts and self locking nuts securing the mounting rubbers at the front of the cross beam to the body frame. Note carefully the number and location of the packing shims between the mounting rubbers and body frame. Remove the six self locking nuts and four bolts securing the rear mounting rubbers to the cross beam.

Remove the four self locking nuts and bolts securing the propeller shaft to the differential pinion flange.

Lower the rear suspension unit on the jack and withdraw the unit from under the car as shown in Fig. 3.

Refitting

Refitting is the reverse of the removal procedure.

Check all mounting rubbers for deterioration.

Bleed the braking system as described in Section L. "Brakes".

If the radius arms have been removed the rear

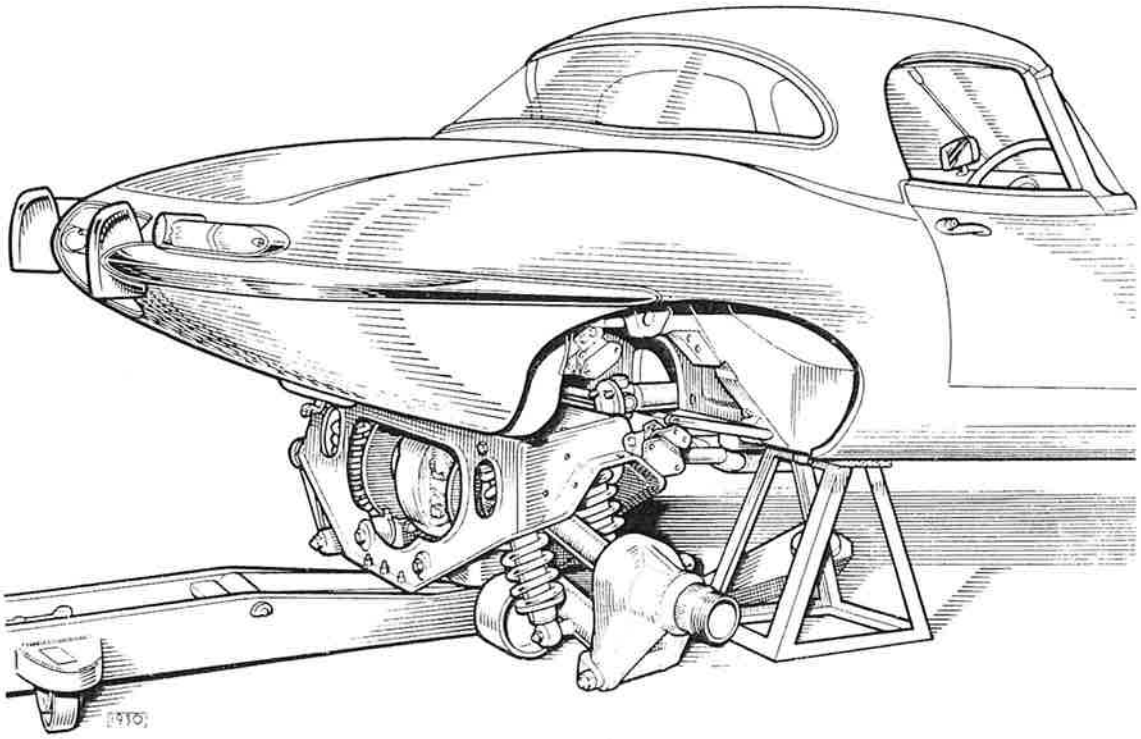

Fig. 3. Removal of the rear suspension assembly from the car

suspension should be at the normal riding height before tightening the radius arm securing nuts on the rear suspension wishbone. Refit the radius arms as described on page K.7.

If the rear suspension mounting rubbers have been removed it is essential that the rubbers are refitted with the cut-away flange towards the suspension unit as shown in Fig 4.

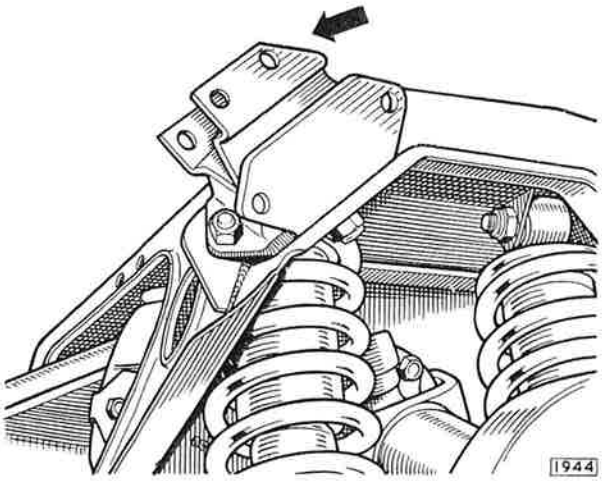

Fig. 4. Showing the correct position of the rear suspension mounting rubber

IMPORTANT

The following removal and refitting operations are described assuming the rear suspension is removed from the car. If it is possible for the operations to be carried out with the rear suspension in position on the car the fact will be noted in the text.

ROAD SPRING AND HYDRAULIC DAMPER ASSEMBLY

Removal

The road spring and hydraulic damper assembly may be removed from the car with the rear suspension assembly in position.

Remove the two self locking nuts and washers securing the two hydraulic dampers to the wishbone.

Support the appropriate wishbone and drift out the hydraulic damper mounting pin, Fig. 6.

Remove the self locking nut and bolt securing each hydraulic damper to the cross beam.

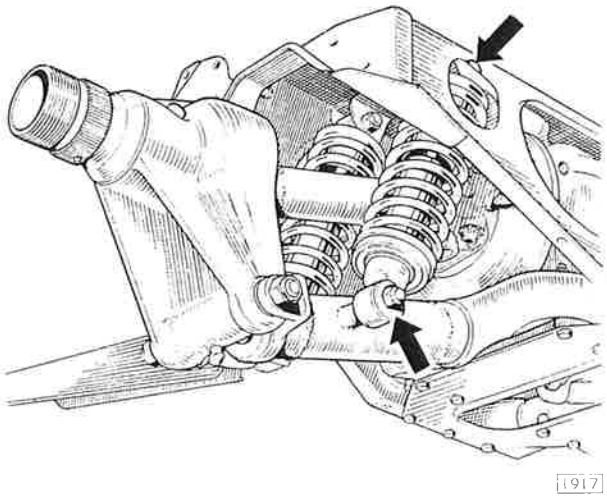

Fig. 5. Hydraulic damper mounting points

Withdraw the hydraulic damper and road spring assembly.

Refitting

Refitting is the reverse of the removal procedure.

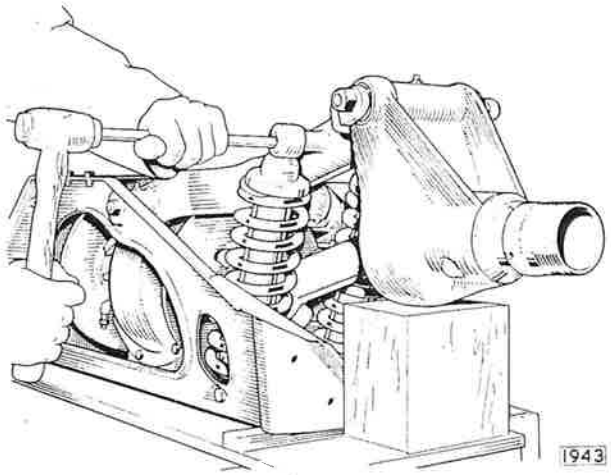

Fig. 6. Drifting out the hydraulic damper mounting pin

HYDRAULIC DAMPERS

The telescopic hydraulic dampers are of the sealed type with no provision for adjustment or "topping-up" with fluid. Therefore, in the event of a damper becoming unserviceable a replacement must be fitted.

Before fitting a damper to a car it is advisable to carry out the following procedure to "bleed" any air from the pressure chamber that may have accumulated due to the damper having been stored in the horizontal position. Hold the damper in its normal vertical position with the shroud uppermost and make several short strokes (not extending more than half way) until there is no lost motion. Finish by extending the damper to its full length once or twice. Do not extend the damper fully until several short strokes have been made first. After the operation of "bleeding", the hydraulic dampers should be kept in their normal upright position until they are fitted to the car.

Removal

Remove the road spring and hydraulic damper as described on page K.6.

Utilizing a suitable press, Fig. 7, compress the road

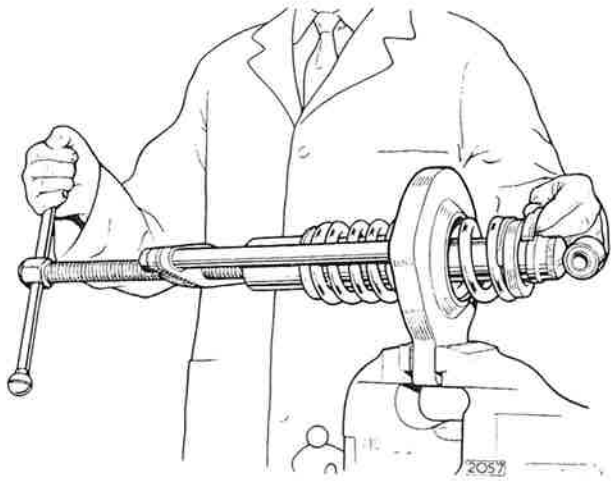

Fig. 7. Removing the rear road spring from the hydraulic damper with Churchill tool J.11 in conjunction with SL.14

spring until the split collet can be removed from under the road spring retaining pad.

Carefully release the pressure on the road spring and withdraw the hydraulic damper.

On early cars an aluminium pad was fitted to either end of the spring. The pad fitted to the shrouded end of the damper was recessed to receive the shroud.

Refitting

Compress the road spring, utilizing Churchill tool No. J.11 and SL.14, sufficiently to allow the hydraulic damper to be passed through the road spring and spring pad and the split collet placed into position, see Fig. 7. Ensure that the split collet and spring pad are seating correctly. Release the pressure on the road spring.

On early cars fit the machined recessed aluminium pad to the shrouded end of the damper. Compress the road spring and pass the damper through the spring and fit the other aluminium pad and secure with the split collet. Release the pressure on the road spring.

Refit the road spring and hydraulic damper assembly as described on page K.6.

RADIUS ARM

Removal

Remove the locking wire from the radius arm safety strap and securing bolt.

Unscrew the two self locking nuts securing the safety strap to the body floor.

Remove the radius arm securing bolt and spring washer and remove the safety strap.

Withdraw the radius arm from the mounting post on the body.

Remove the self locking nut and bolt securing the anti-roll bar to the radius arm..

Remove one of the self locking nuts securing the hub bearing assembly fulcrum shaft to the wishbone.

Drift out the fulcrum shaft from the wishbone and hub assembly as described on page K.12.

Remove the self locking nut and bolt securing the radius arm to the wishbone and remove the radius arm.

Examine the radius arm mounting rubbers for deterioration.

Refitting

Refitting is the reverse of the removal procedure.

When replacing the large radius arm body mounting rubber, the two holes should be in the longitudinal position in the radius arm as shown in Fig. 9.

The rubbers on the wishbone mounted end of the radius arm can be pressed out. Ensure that the rubbers are refitted with an equal amount of space showing on each side of the radius arm.

When refitting the hub bearing assembly shaft refer to page K.14.

REAR SUSPENSION

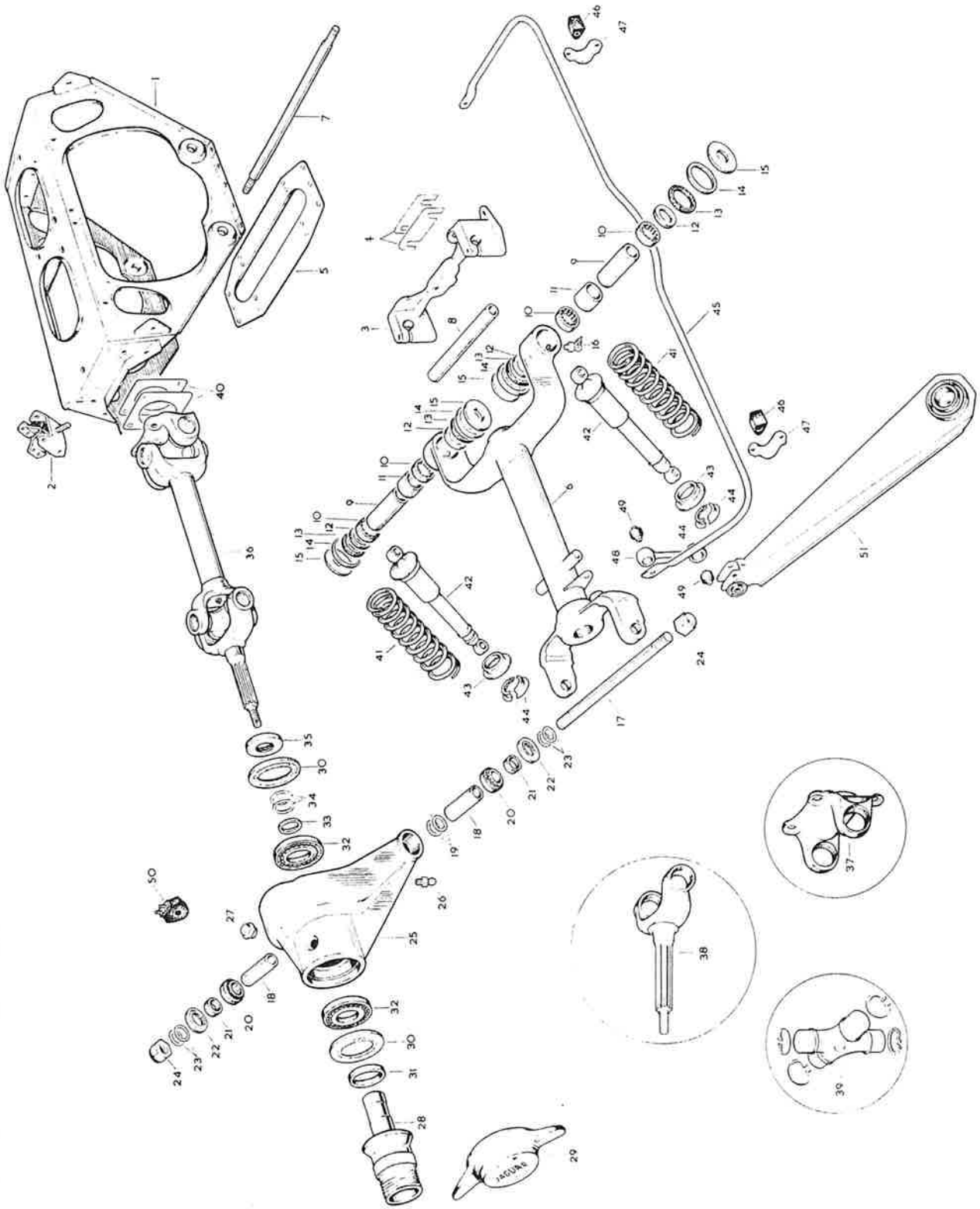

Fig. 8. Exploded view of rear suspension assembly

1. Rear suspension cross member.
2. Rubber mounting.
3. Inner fulcrum mounting bracket.
4. Shims.
5. Tie plate
6. Wishbone.
7. Inner fulcrum shaft.
8. Distance tube.
9. Bearing tube.
10. Needle bearings.
11. Spacing collar.
12. Inner thrust washer.
13. Sealing ring.
14. Sealing ring retainer.
15. Outer thrust washer.
16. Grease nipple.
17. Outer fulcrum shaft.
18. Distance tube.
19. Shims.
20. Bearing.
21. Oil seal track.
22. Oil seal.
23. Shims.
24. Self locking nut.
25. Hub carrier.
26. Grease nipple.
27. Grease retaining cap.
28. Rear hub.
29. Hub cap.
30. Oil seal.
31. Oil seal track.
32. Outer bearing.
33. Spacer.
34. Shims (early cars only).
35. Oil seal track.
36. Half shaft.
37. Flange yoke.
38. Splined yoke.
39. Journal assembly.
40. Shim.
41. Coil spring.
42. Shock absorber.
43. Seat.
44. Retaining collet.
45. Anti-roll bar.
46. Rubber bush.
47. Bracket.
48. Link.
49. Rubber bush.
50. Bump stop.
51. Radius arm.

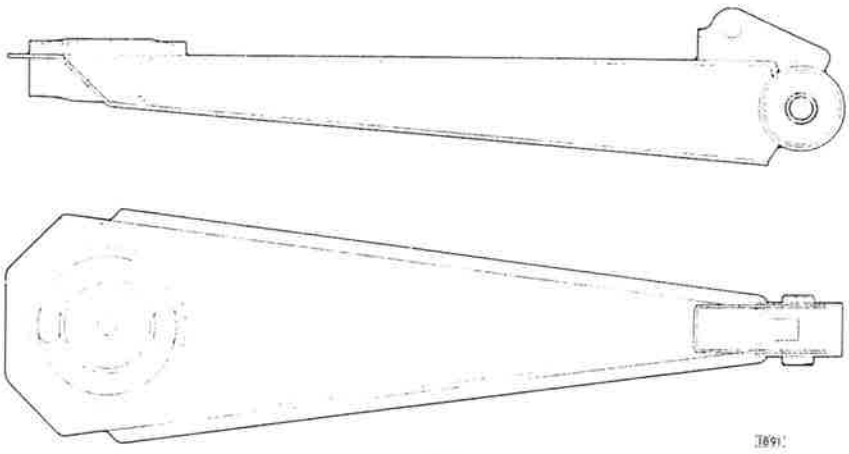

Fig. 9. Showing the position of the mounting rubbers in the radius arm

Refit the safety strap into position, refit the spring washer and radius arm securing bolt.

Refit the two bolts and nuts securing the safety strap to the body.

Tighten the radius arm securing bolt to 46 lb.ft. (6·36 kgm.) and pass the locking wire through the hole in the head of the bolt and secure round the safety strap.

WISHBONE

Removal

Remove the hydraulic dampers from the appropriate wishbone as described on page K.6.

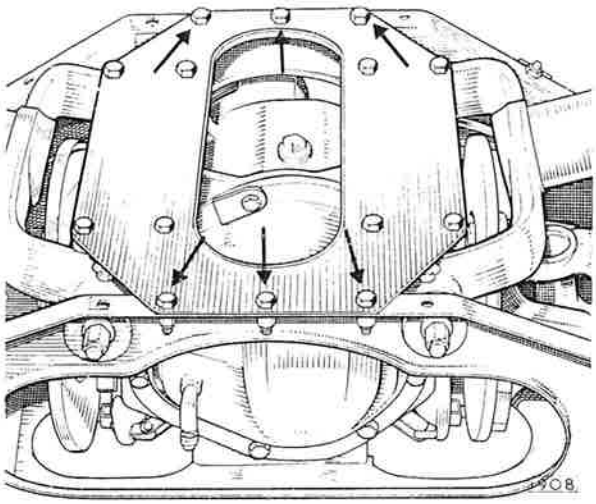

Fig. 10. Showing the six bolts which secure the tie plate to the cross beam

Remove the six self locking nuts and bolts securing the tie plate to the cross beam.

Remove the eight self locking nuts and bolts securing the tie plate to the inner fulcrum wishbone mounting brackets and remove the tie plate.

Remove one of the self locking nuts securing the hub

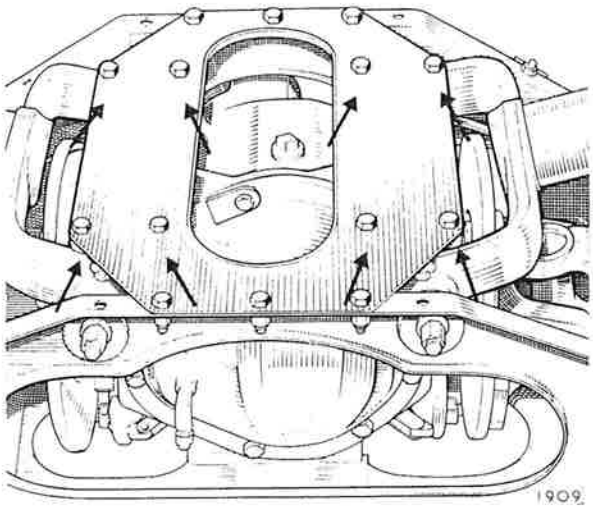

Fig. 11. Showing the eight bolts which secure the tie plate to the inner fulcrum mounting bracket

bearing assembly fulcrum shaft to the wishbone and drift out the fulcrum shaft. see Fig. 16.

Separate the hub carrier from the wishbone. If any shims are fitted between the wishbone and hub assembly note the amount and position of the shims as it is essential to replace the exact amount in the correct

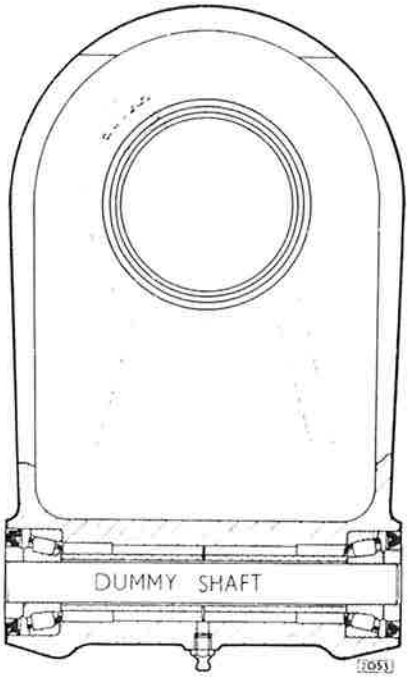

Fig. 12. Showing the dummy shaft in position in the hub carrier

position. To facilitate refitting slide a dummy fulcrum shaft Churchill tool No. J.14 through the hub carrier.

Place a piece of sticky tape over each of the hub carrier assembly oil seal tracks to prevent them becoming displaced.

Remove the self locking nut securing the radius arm to the wishbone. Withdraw the special thin headed bolt and remove the radius arm from the wishbone.

Remove the self locking nut securing the wishbone fulcrum shaft to the cross beam.

Drift the inner fulcrum shaft out of the wishbone and inner fulcrum mounting bracket.

Withdraw the wishbone assembly and collect the four outer thrust washers, inner thrust washers, oil seals and oil seal retainers.

Examine the oil seals for deterioration.

Remove the two bearing tubes.

There is no need to remove the spacer fitted between the inner fulcrum mounting bracket unless the mounting bracket is to be replaced. To remove the spacer, tap out of position. To remove the needle rollers gently tap the needle cages out of the wishbone using a suitable drift. Remove the needle roller spacer.

Refitting

If the needle rollers have been removed from the

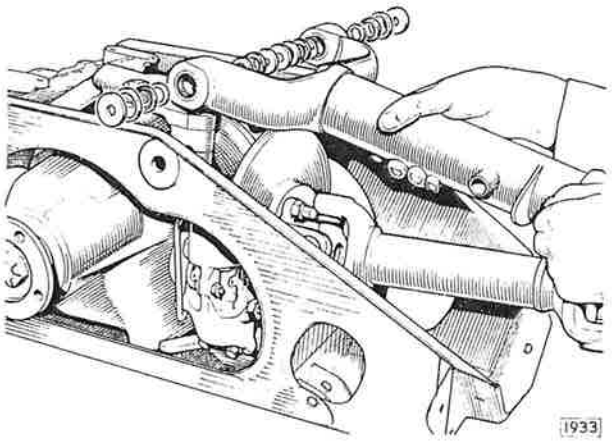

Fig. 13. Showing the wishbone inner fork and components

larger fork of the wishbone lever press one roller cage into position, with the engraving on the roller cage facing outwards.

Insert the roller spacing tube and press in the other roller cage.

Repeat for the other side.

Insert the bearing tubes. Smear the four outer thrust washers, inner thrust washers, oil seals and oil seal retainers with grease and place into position on the wishbone, see Fig. 13.

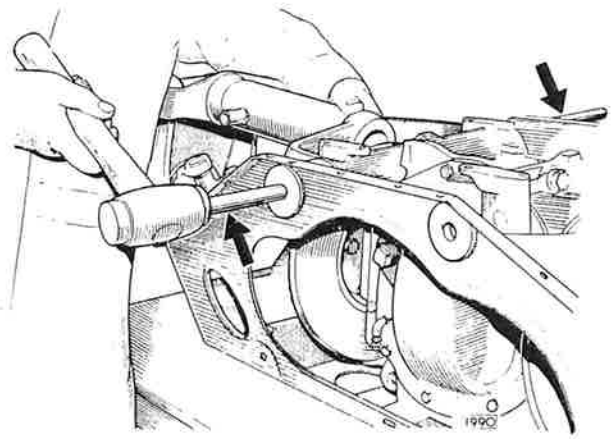

Fig. 14. Tapping the dummy shafts into position at the wishbone inner fulcrum

Offer up the wishbone to the inner fulcrum mounting bracket with the radius arm mounting bracket towards the front of the car. Align the holes and spacers. Press a dummy shaft Churchill tool No. J.14 through each side of the cross beam and wishbone.

The dummy shafts locate the wishbone, thrust washers, cross beam and inner fulcrum mounting bracket and facilitate refitting of the fulcrum shaft.

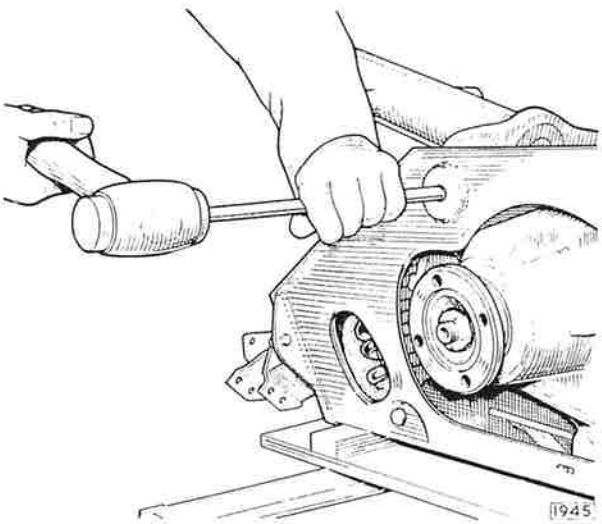

Fig. 15. Drifting the inner fulcrum shaft into position and displacing the dummy shafts

Smear the fulcrum shaft with grease and gently tap the shaft through the cross beam, wishbone and inner fulcrum mounting bracket. As the fulcrum shaft is tapped into position the short dummy shafts will be displaced from the opposite side. It will be found advantageous to keep a slight amount of pressure exerted on the dummy shafts as they emerge from the cross beam. This will reduce the tendency for the dummy shafts to be knocked out of position and allow a spacer or thrust washer to be displaced. If a washer or spacer becomes displaced it will be necessary to remove the fulcrum shaft, dummy shafts and wishbone and then repeat the operation.

When the fulcrum shaft is in position tighten the two self locking nuts to 55 lb.ft. (7·60 kgm.) with a torque wrench.

Refit the eight bolts and self locking nuts securing the tie plate to the inner fulcrum wishbone mounting bracket.

Refit the six bolts and self locking nuts securing the tie plate to the cross beam.

Refit the radius arm to the wishbone as described on page K.7.

Remove the two pieces of sticky tape holding the oil seal tracks in position.

Offer up the wishbone to the hub assembly.

Using a dummy shaft, Churchill tool No. J.14, line up the wishbone hub assembly oil seal tracks and spacers. Smear the fulcrum shaft with grease and gently tap the fulcrum shaft into position and displace the dummy shaft.

It will be found advantageous to apply a small amount of pressure on the locating bar against the fulcrum shaft to prevent the bar being knocked out of position and allowing a spacer to be displaced. If a spacer is displaced it may be necessary to repeat the operation.

Slide the fulcrum shaft through the wishbone and hub carrier. Using feeler gauges check the amount of clearance between the hub carrier and the wishbone lever, see Fig. 19. If necessary fit sufficient shims between the hub carrier and the wishbone to centralize the hub carrier. Tighten the nuts on the fulcrum shaft to 55 lb.ft. (7·60 kgm.).

Check the rear suspension camber angle as described on page K.15.

Refit the hydraulic dampers as described on page K.7.

Refit the rear suspension as described on page K.5.

Re-lubricate the wishbone fulcrum shafts as described in "Routine Maintenance" at the beginning of this section.

WISHBONE OUTER PIVOT

Removal

Support the hub carrier and wishbone.

Remove one of the self locking nuts securing the outer fulcrum shaft.

Drift out the fulcrum shaft, Fig. 16, and collect the shims, if any, between the hub carrier and the wishbone.

Separate the hub carrier and wishbone.

Dismantling

Remove the oil seal track and prise out the oil seals.

Remove the inner races of the tapered roller bearings, spacers and shims.

Re-assembly

Refit the inner races for the tapered roller bearings

Fit the spacers and a known quantity of shims, thi

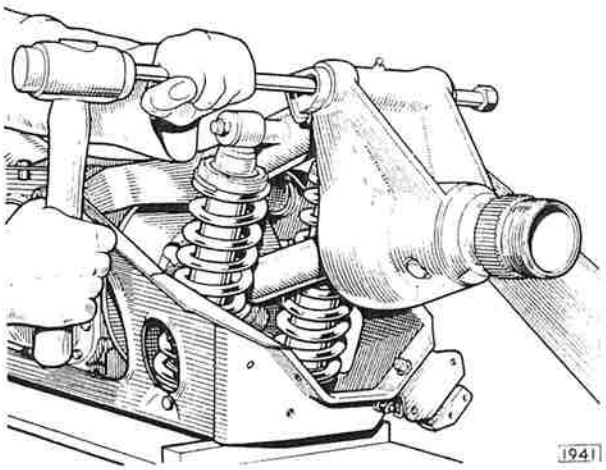

Fig. 16. Drifting out the wishbone outer fulcrum shaft

is necessary to obtain the correct bearing adjustment as described in the following paragraphs.

Fit the tapered roller bearings and oil seal tracks.

Bearing Adjustment

If it is necessary to adjust the tapered roller bearings it will be necessary to extract the hub from the rear axle half shaft as described in Section H "Rear Axle"

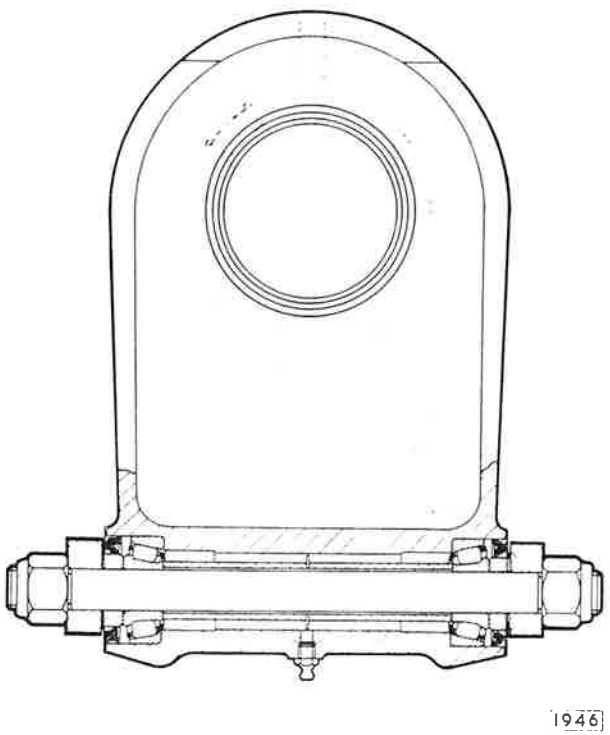

Fig. 17. Section through hub carrier and wishbone showing outer fulcrum shaft in position

Bearing adjustment is effected by shims fitted between the two fulcrum shaft spacer tubes. The correct bearing adjustment is ·000"—·002" (·00 mm.—·05 mm.) pre-load.

Shims are available in sizes of ·004" (·101 mm.) and ·007" (·17 mm.) thick and $1\frac{1}{8}$" (28·67 mm.) diameter.

A simple jig should be made consisting of a piece of plate steel approximately 7" × 4" × $\frac{3}{8}$" (17·7cm. × 10·1cm. × 9·5mm.). Drill and tap a hole suitable to receive the outer fulcrum shaft. Place the steel plate in a vice and screw the fulcrum shaft into the plate and slide an oil seal track onto the shaft. Place the assembly into position on the fulcrum shaft minus the oil seals and with an excess of shims, of a known quantity, between the spacers. Place an inner wishbone fork outer thrust washer onto the fulcrum shaft so that it abuts the oil seal track. Fill the remaining space on the shaft with washers and secure with a nut. Tighten the nut to 55 lb.ft. (7·60 kgm). Press the hub carrier assembly towards the steel plate using a slight twisting motion to settle the rollers onto the bearing surface. Maintain a steady pressure against the hub carrier and using a feeler gauge measure the amount of clearance between the large diameter washer and the machined face of the hub carrier.

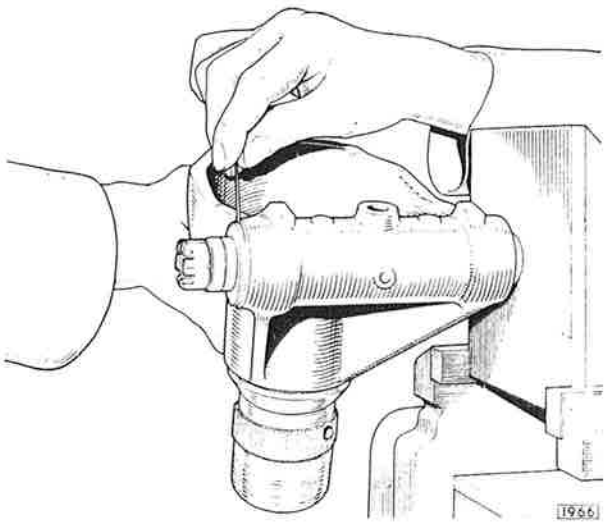

Fig. 18. Measuring the amount of clearance between the hub carrier and large washer to determine the end float in the bearings

Pull the hub carrier assembly towards the large diameter washer slightly rotating the carrier to settle the rollers onto the bearing surface. Maintain a steady pressure against the hub carrier and using feeler gauges measure the amount of clearance between the large diameter washer and the machined face of the hub carrier.

Subtract the one measurement from the other which gives the amount of end float present in the bearings.

Remove sufficient shims to obtain a reading of ·000″—·002″ (·00 mm.—·05 mm.) preload.

Example:—

Correct preload ·000″—·002″ (·00 mm.—·05 mm.)

Mean ·001″ (·02 mm.)

Assume the bearing end float to be ·010″ (·25 mm.)

Therefore ·010″ + ·001″ = ·011″ (·25 mm. + ·02 mm. = ·27 mm.) to be removed to give correct preload.

Refit the hub carrier to the half shaft as described in Section H "Rear Axle".

Fit new oil seals with the lips inwards and place the fulcrum shaft into position in the hub carrier.

Offer up the hub carrier to the wishbone. Chase the dummy shaft through the wishbone with the fulcrum shaft.

Using feeler gauges measure the gap between the oil seal track and the wishbone. Shims of ·004″ (·101 mm.) thickness by $\frac{7}{8}$″ (22·2 mm.) diameter should be used.

Repeat for the other end and shim as necessary to centralize the hub carrier in the wishbone fork. The above procedure is to prevent the wishbone fork ends

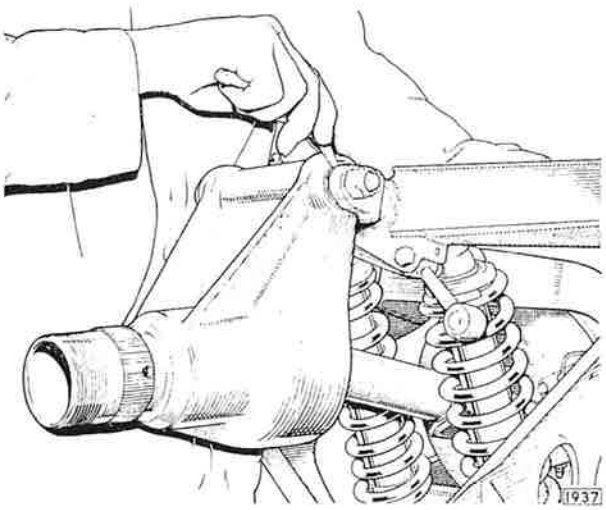

Fig. 19. Using feeler gauges to measure the clearance between the hub carrier oil seal tracks and wishbone fork

from closing inwards. Tighten the nuts on the fulcrum shaft to 55 lb.ft. (7·60 kgm.).

Refitting

To facilitate refitting, slide a dummy shaft Churchill tool No. J.14 through the hub carrier before offering up the wishbone to the hub carrier.

Refitting is the reverse of the removal procedure.

Re-lubricate the bearings as described in "Routine Maintenance" at the beginning of the section.

INNER FULCRUM WISHBONE MOUNTING BRACKET

Removal

Remove the eight bolts and self locking nuts securing the tie plate to the inner fulcrum wishbone mounting bracket.

Remove the six bolts and self locking nuts securing the tie plate to the cross beam.

Remove one self locking nut and drift out the inner fulcrum shaft.

Withdraw the forks of the wishbone from between the cross beam and inner fulcrum wishbone mounting bracket.

Collect the oil seal retainers, oil seals, inner and outer thrust washers and bearing tubes.

Remove the lock wire from the two setscrews which secure the inner fulcrum wishbone mounting bracket to the differential unit.

Remove the spacer between the inner fulcrum mounting bracket

Remove the two setscrews and note the amount of shims between the bracket and the differential.

Remove the inner fulcrum wishbone mounting bracket.

Refitting

If only one inner fulcrum wishbone mounting bracket is removed, replace the same amount of shims between the differential casing and the bracket.

Shims are available in sizes of ·005″ (·127 mm.) and ·007″ (·177 mm.) thickness.

If, however, both the inner fulcrum wishbone mounting brackets have been removed or replaced, it will be necessary to re-shim the brackets.

Hold the inner fulcrum wishbone mounting bracket in position between the cross beam.

Insert the fulcrum shaft through the cross beam and bracket. Screw the inner fulcrum bracket securing setscrews in two or three threads, enough to locate the bracket.

Insert the required amount of shims and tighten the two setscrews securing the inner fulcrum wishbone mounting bracket to the differential casing. Secure the two setscrews with locking wire.

Tap the spacer, fitted between the inner fulcrum mounting bracket lugs, into position.

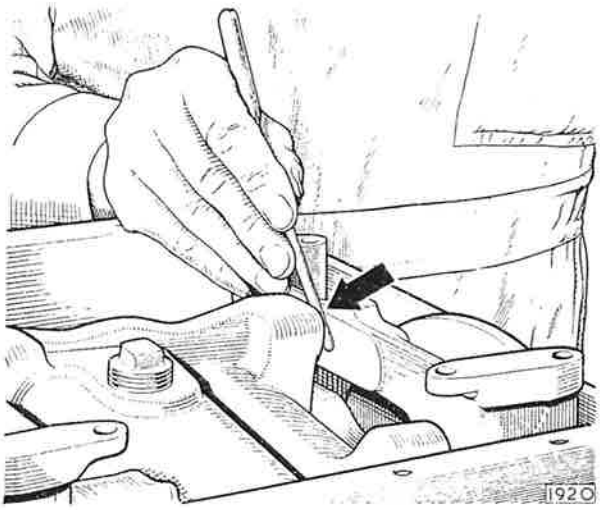

Fig. 20. Measuring the clearance between the inner fulcrum mounting bracket and the differential casing

Withdraw the inner fulcrum shaft from the cross beam and fulcrum bracket.

Offer up the wishbone to the inner fulcrum mounting bracket complete with bearing tubes, needle roller bearing and spacers, inner and outer thrust washers, oil seals and oil seal retainers. Ensure that the radius arm mounting bracket is towards the front of the car.

Align the holes and spacers. Press a dummy shaft through each side of the cross beam and wishbone.

The dummy shafts locate the wishbone, spacers, cross beam and inner fulcrum mounting bracket and facilitate refitting of the fulcrum shaft.

Smear the fulcrum shaft with grease and gently tap the shaft through the cross beam, wishbone and inner fulcrum mounting bracket. As the fulcrum is tapped into position the short dummy shafts will be displaced from the opposite side. It will be found advantageous to keep a slight amount of pressure exerted on the dummy shafts as they emerge from the cross beam.

This will reduce the tendency for the dummy shafts to be knocked out of position and allow a spacer or thrust washer to be displaced. If a washer or spacer becomes displaced it will be necessary to remove the fulcrum shaft, dummy shafts and wishbone and then repeat the operation.

When the fulcrum shaft is in position tighten the two self locking nuts to 55 lb.ft. (7·60 kgm.) with a torque wrench.

Refit the eight bolts and self locking nuts securing the tie plate to the inner fulcrum wishbone mounting bracket.

Refit the six bolts and self locking nuts securing the tie plate to the cross beam.

Refit the rear suspension unit as described on page K.5.

REAR WHEEL CAMBER ANGLE—ADJUSTMENT

To check the camber angle of the rear suspension it is necessary for the car's wheels to be on a flat surface and for the tyre pressures to be correct.

Check that the level of the oil and water is correct and that the petrol tank is full. If not additional weight must be added to compensate for, say, a low level of petrol.

The weight of 10 gallons of petrol is approximately 80 lbs. (36·0 kg).

A 170 lb. (77·2 kg.) weight should be placed in front of the driver's seat and a 56 lb. (25·4 kg.) weight in front of the passenger's seat.

Roll the car backwards and forwards until the road wheels have rotated at least six times; this procedure is to settle the suspension in the loaded condition. Measure the distance from the ground to the inner and outer pivots A and B on the rear suspension, see Fig. 22. The difference between the two measurements should be $1\frac{9}{16}'' \pm \frac{1}{8}''$ (3·95 cm. $\pm$ 3·1 mm.).

Check the camber of the rear wheels, using a recommended gauge, by placing the gauge against each rear tyre in turn as shown in Fig. 21. The correct reading is $-\frac{3}{4}^\circ \pm \frac{1}{4}^\circ$. If the reading is incorrect it will be necessary to add or subtract shims between the half shaft and the brake disc. One shim ·020″ (·5 mm.) will alter the rear camber angle by approximately $\frac{1}{4}^\circ$.

Jack up the car on the appropriate side and remove the rear road wheel.

Remove the self locking nut and washer securing

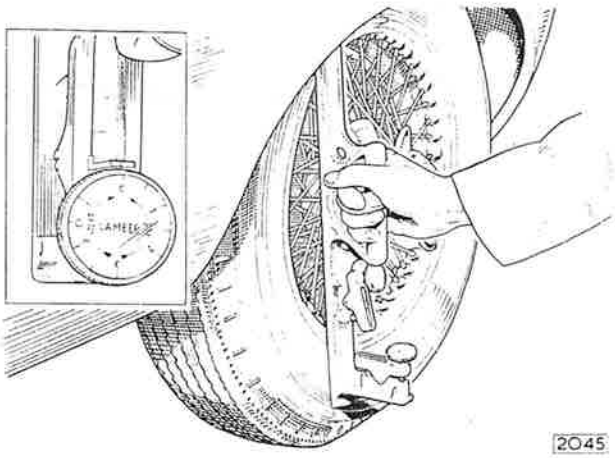

Fig. 21. Checking the rear wheel camber angle

REAR SUSPENSION

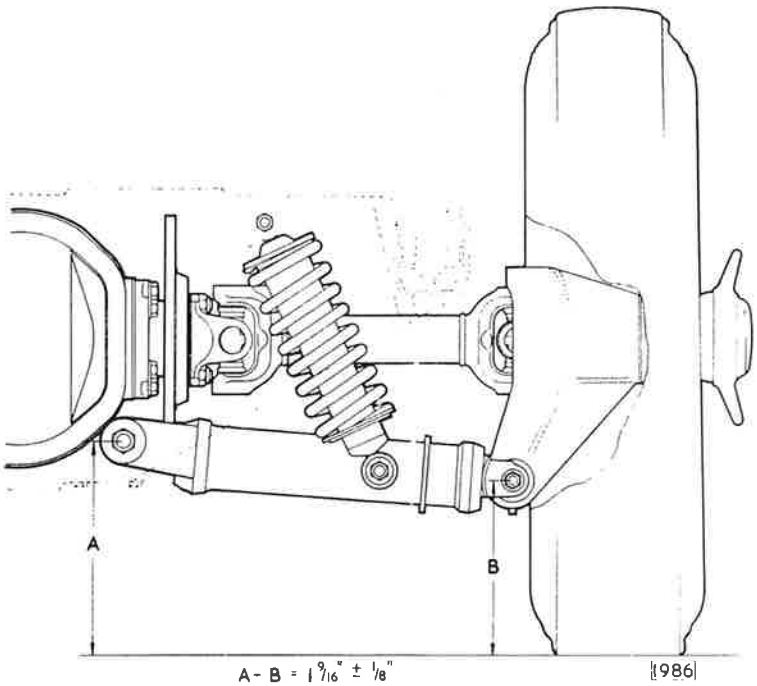

Fig. 22. Showing the fulcrum points 'A' and 'B' on the rear suspension from which measurements should be taken

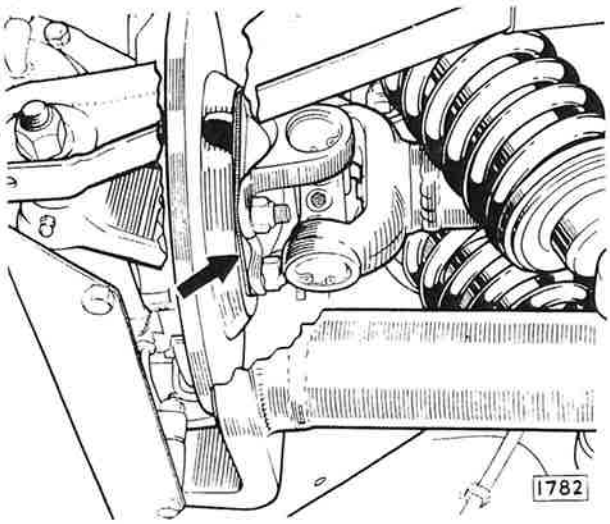

Fig. 23. The rear wheel camber angle is adjusted by means of shims indicated by the arrow

the forward road spring and hydraulic damper assembly to the wishbone mounting pin. Drift the mounting pin through the wishbone until the assembly is free from the pin.

Remove the self locking nut and bolt securing the top of the road spring and hydraulic damper assembly to the cross beam and remove the assembly.

Unscrew the four self locking nuts securing the half shaft and the camber shims to the brake disc. Pull the hub and half shaft away from the shims sufficiently to clear the disc mounting studs. Remove or add shims as necessary.

Offer up the half shaft to the four disc mounting studs and secure with four self locking nuts. Offer up the forward road spring and hydraulic damper assembly to the cross beam and secure with a bolt and self locking nut.

Align the hydraulic damper and road spring assembly bottom mounting with the mounting pin in the wishbone and drift the pin through the assembly. Replace the plain washer and secure with a self locking nut.

Replace the rear road wheel and secure with the hub cap. Release the jack and load the car as previously described. Move the car backwards and forwards until the roadwheels have rotated at least six times.

Check the measurement variation between the inner and outer pivots, see Fig. 22 which should be $1\frac{9}{16}'' \pm \frac{1}{8}''$ (3·95 cm ± 3·1 mm.) and recheck the camber angle.

Printed in England by Buckler & Webb Ltd., Church Street, Birmingham 3

SECTION L

BRAKES

3·8 "E" TYPE GRAND TOURING MODELS

INDEX

INDEX *(Continued)*

THE BRAKING SYSTEM

DESCRIPTION

The front wheel brake units are comprised of a hub mounted disc rotating with the wheel and a braking unit rigidly attached to each suspension member. The rear brake units are mounted inboard adjacent to the differential case. The braking unit is rigidly attached to the differential case. The brake unit consists of a caliper which straddles the disc and houses a pair of rectangular friction pad assemblies, each comprising a pad and a securing plate. These assemblies locate between a keep plate bolted to the caliper bridge and two support plates accommodated in slots in the caliper jaw. Cylinder blocks bolted to the outer faces of the caliper accommodate piston assemblies which are keyed to the friction pad assemblies. A spigot formed on the outer face of each piston locates in the bore of a backing plate with an integral boss grooved to accommodate the collar of a flexible rubber dust seal. The outer rim of the seal engages a groove around the block face and so protects the assembly from intrusion of moisture and foreign matter. A piston seal is located between the piston inner face and a plate secured by peen locked screws. (On later cars incorporating the revised retraction arrangement, a one piece piston is fitted).

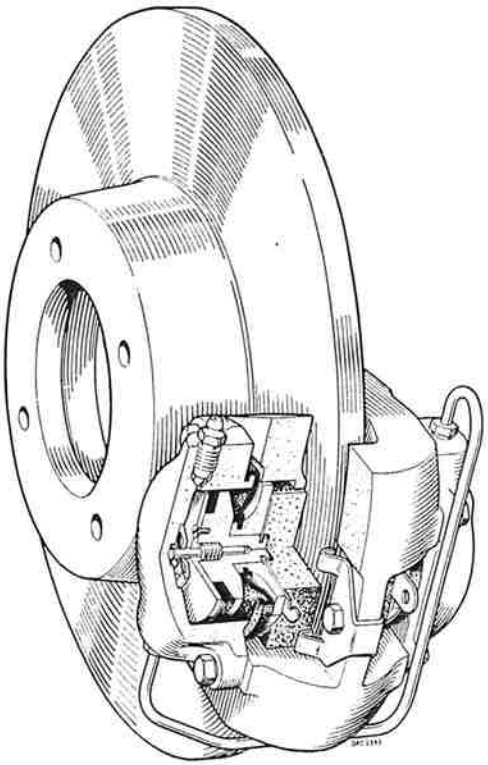

Fig. 1. Sectional view of a front disc brake

DATA

Make	Dunlop
Type	Bridge type caliper with quick change pads
Brake disc diameter—front	11″ (27·9 cm)
rear	10″ (25·4 cm)

Master cylinder bore diameter	$\frac{5}{8}''$ (15·87 mm)
Master cylinder stroke (upper—rear brakes)	1″ (25·4 mm)
(lower—front brakes)	$1\frac{3}{8}''$ (34·92 mm)
Brake cylinder bore diameter —front	$2\frac{1}{8}''$ (53·97 mm)
—rear	$1\frac{3}{4}''$ (44·45 mm)
Servo unit type	Dunlop bellows type vacuum servo
Main friction pad material	Mintex M.59*
Handbrake friction pad material	Mintex M.34
Special Tools	
Piston re-setting lever	Part Number 7840

*Early cars fitted with M.40 or M.33 pads.

Retractor Operation (early type)

A counterbore in the piston accommodates a retractor bush which tightly grips the stem of a retractor pin. This pin forms part of an assembly which is peened into the base of the cylinder bore. The assembly comprises a retractor stop bush, two spring washers, a dished cap and the retractor pin; it functions as a return spring and maintains a "brake-off" working clearance of approximately 0·008/0·010″ (·20–·25 mm) between the pads and the disc throughout the life of the pads.

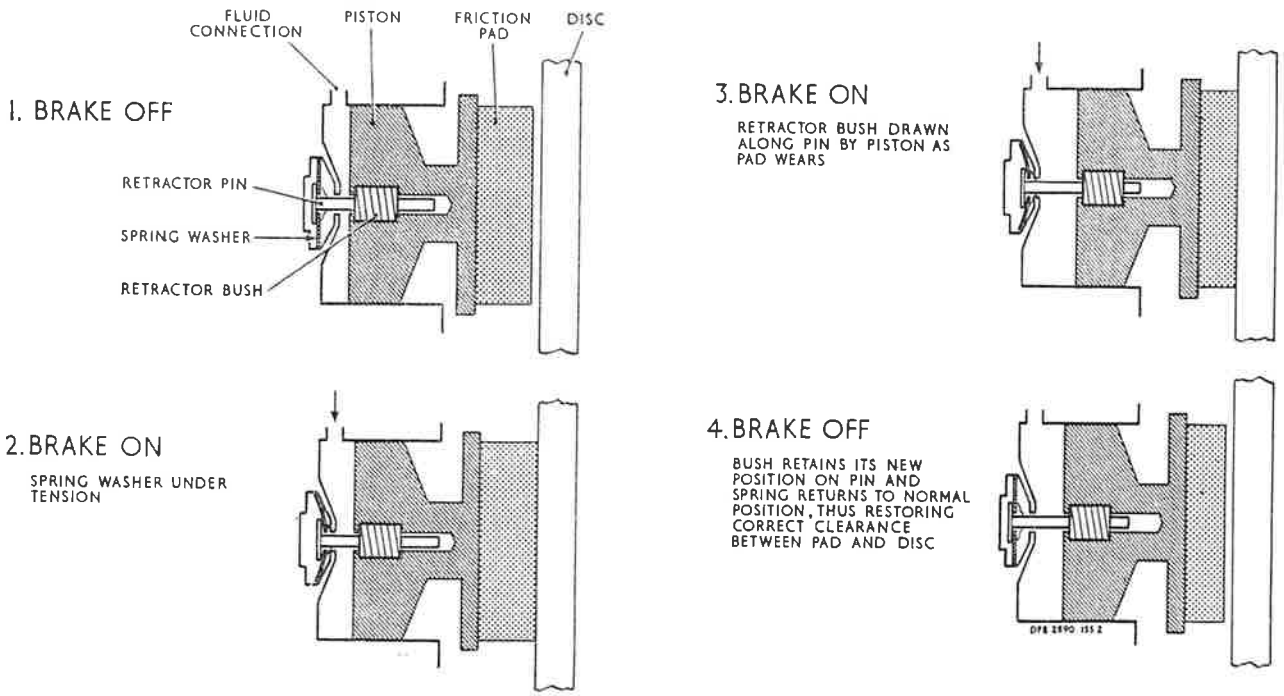

Fig. 2. Operation of the self-adjusting mechanism—early type

BRAKES

Retractor Operation (later type)

The retractor unit (see Fig. 3) comprises the retractor pin pressed into the cylinder block and the retractor bush, washer, return spring and spring retainer peened into the piston.

When the brakes are applied the piston moves the friction pad towards the disc. The retractor bush grips the pin holding the spring retainer and the return spring against the washer. The piston in moving the distance between the pad and disc compresses the return spring and when the brakes are released the return spring expands maintaining an equal clearance between the pad and disc.

When the pad wears and has not made contact with the disc by the time that the washer has fully compressed the return spring, the washer will move the retractor bush down the pin until the pad contacts the disc. The retractor bush stop in this new position and when the brakes are released the return spring expands allowing the pads to maintain the normal "brakes off" clearance of approximately ·008"—·010" (·20–·25 mm) as before.

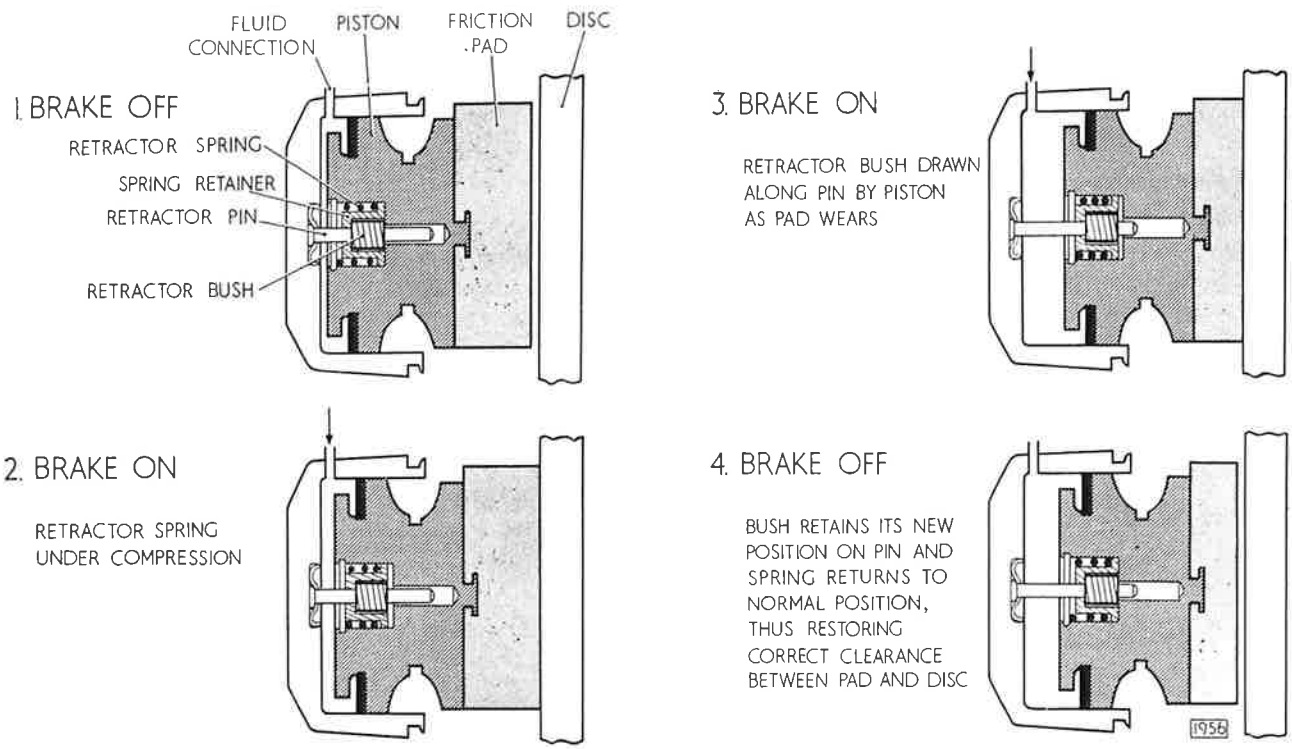

Fig. 3. Operation of the self-adjusting mechanism—later type

Handbrake

The mechanical handbrake units are mounted on and above the caliper bodies of the rear roadwheels brake by means of pivot bolts.

Each handbrake unit consists of two carriers, one each side of the brake disc and attached to the inside face of each carrier by means of a special headed bolt is a friction pad. The free end of the inner pad carrier is equipped with a pivot seat to which the forked end of the operating lever is attached. A trunnion is also mounted within the forked end of the operating lever and carries the threaded end of the adjuster bolt on the end of which is a self-

locking nut. Located on the shank of the adjuster bolt and in a counterbore in the inside face of the inner pad carrier is the operating lever return spring held under load by a nut retained by a spring plate riveted to the inside face of the inner carrier. The adjuster bolt passes through the outer pad carrier and its hemispherically shaped head seats in a suitable recess in the outer carrier.

ROUTINE MAINTENANCE

WEEKLY

Brake Fluid Level

On right-hand drive cars the fluid reservoirs (two) for the hydraulic brakes are attached to the bulkhead on the driver's side. The left-hand reservoir (nearest to centre line of car) supplies the rear brakes and the right-hand supplies the front brakes.

On left-hand drive cars the fluid reservoirs (two) for the hydraulic brakes are attached to the front frame assembly adjacent to the exhaust manifold. The forward reservoir supplies the rear brakes, the rear reservoir supplies the front brakes.

At the recommended intervals check the level of fluid in the reservoir and top up if necessary to the level mark, above fixing strap, marked "Fluid Level" using only the correct specification of Brake Fluid. Do NOT overfill.

The level can be plainly seen through the plastic reservoir container.

First, disconnect the two electrical cables from the "snap-on" terminals. Unscrew the filler cap and "top-up" if necessary to the recommended level. Insert the combined filler cap and float slowly into the reservoir to allow for displacement of fluid and screw down the cap. Wipe off any fluid from the top of the cap and connect the cables to either of the two terminals.

Note: A further indication that the fluid level is becoming low is provided by an indicator pin situated between the two terminals.

First press down the pin and allow it to return to its normal position; if the pin can then be lifted with the thumb and forefinger the reservoir requires topping-up immediately.

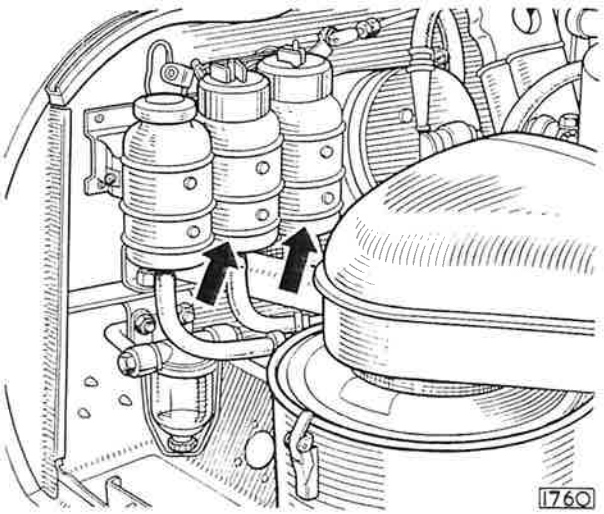

Fig. 4. Fluid reservoirs—Right hand drive

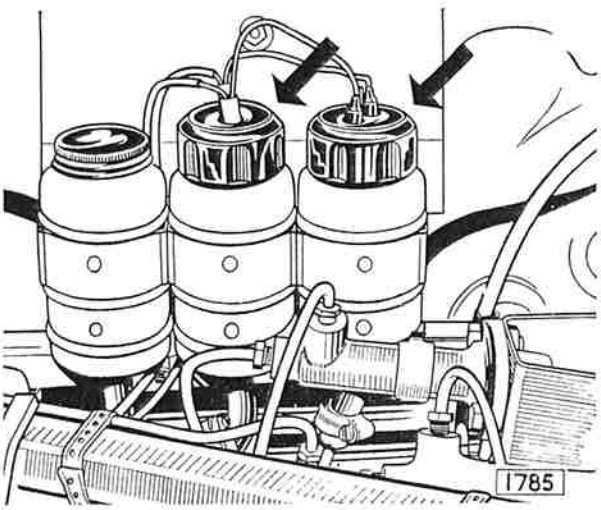

Fig. 5. Fluid reservoirs—Left hand drive

BRAKES

Brake Fluid Level Warning Light

A warning light (marked "Brake Fluid—Handbrake") situated on the facia behind the steering wheel, serves to indicate if the level in one or both of the brake fluid reservoirs has become low, provided the ignition is "on". As the warning light is also illuminated when the handbrake is applied, the handbrake must be fully released before it is assumed that the fluid level is low. If with the ignition "on" and the handbrake fully released the warning light is illuminated, the brake fluid must be "topped-up" immediately.

As the warning light is illuminated when the handbrake is applied and the ignition is "on" a two-fold purpose is served. Firstly, to avoid the possibility of driving away with the handbrake applied. Secondly, as a check that the warning light bulb has not "blown"; if on first starting up the car with the handbrake fully applied, the warning light does not become illuminated the bulb should be changed immediately.

Note: If it is found that the fluid level falls rapidly indicating a leak from the system, the car should be taken immediately to the nearest Jaguar Dealer for examination.

EVERY 2,500 MILES (4,000 km)

Footbrake Adjustment

Both the front and rear wheel brakes are so designed that no manual adjustment to compensate for brake friction pad wear is necessary as this automatically takes place when the footbrake is applied.

Handbrake Adjustment

The mechanically operated handbrakes are attached to the rear caliper bodies but form an independent mechanically actuated system carrying their own friction pads and individual adjustment.

To adjust the handbrakes to compensate for friction pad wear which will be indicated by excessive handbrake lever travel, carry out the following procedure. Remove the carpet from the luggage compartment floor by lifting the snap fasteners and rolling carpet away. Remove rear axle cover now exposed by unscrewing the seven screws retaining cover to floor.

Insert a ·004" (·10 mm) feeler gauge between the face of one handbrake pad and the disc and screw in the adjuster bolt (using the special key provided in the tool kit) until the feeler gauge is just nipped.

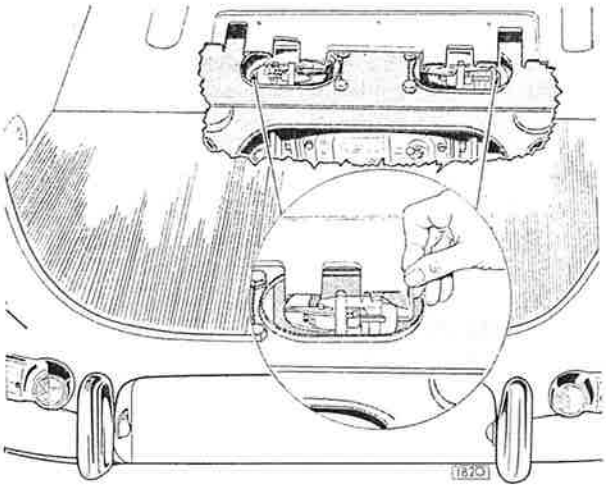

Fig. 6. Handbrake adjustment

Withdraw the feeler gauge and check the disc for free rotation. Repeat for the other side.

If, after carrying out the above adjustment, satisfactory travel of the handbrake lever is not obtained, the handbrake cable should be adjusted as follows:

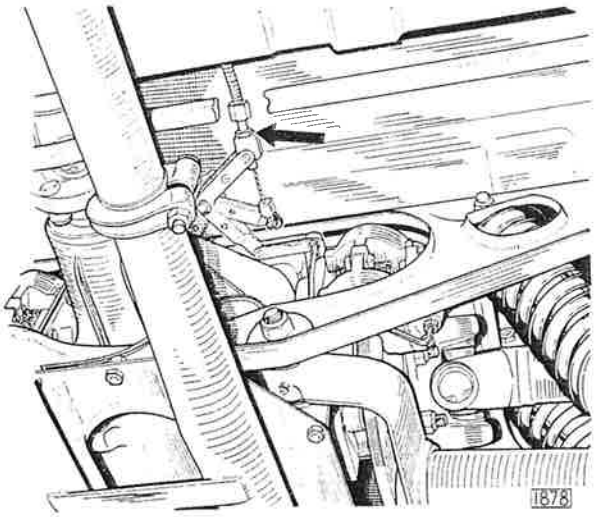

Fig. 7. Handbrake cable adjustment

Screw in the handbrake adjuster bolt at each rear brake until the handbrake pads are in hard contact with the brake discs.

Fully release the handbrake lever.

Slacken the locknut securing the threaded adaptor to the compensator at the rear end of the handbrake

cable. Screw out the adaptor until there is no slack in the cable; it is, however, important to ensure that the cable is not under tension. Tighten the locknut and reset handbrake pad clearance with a .004″ (.10mm) feeler gauge as described above.

EVERY 5,000 MILES (8,000 KM.)

Brake Pedal Bearing

The brake pedal bearing should be lubricated with engine oil (Fig. 8).

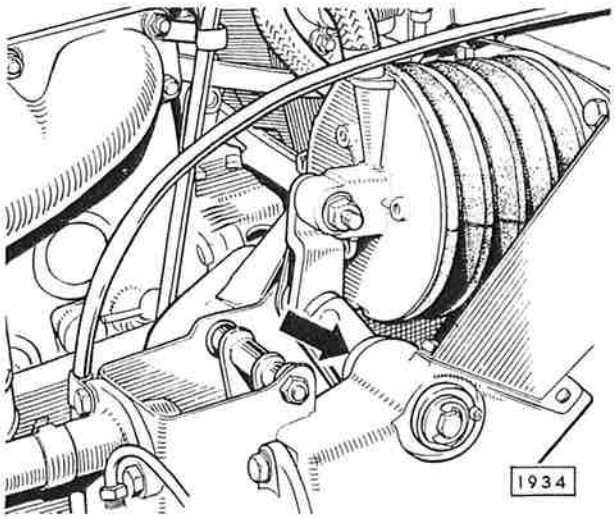

Fig. 8. Pedal bearing lubrication

Friction Pads—Examination for wear

At the recommended intervals, or if a loss of braking efficiency is noticed, the brake friction pads (2 per brake) should be examined for wear; the ends of the pads can be easily observed through the apertures in the brake caliper. When the friction pads have worn down to a thickness of approximately $\frac{1}{4}$″ (7 mm) they need renewing.

Friction Pads—Renewal

To remove the friction pads, unscrew the nut from the bolt attaching the friction pad retainer to the caliper and extract the bolt. Withdraw the pad retainer.

Insert a hooked implement through the hole in the metal tag attached to the friction pad and withdraw the pad by pulling on the tag.

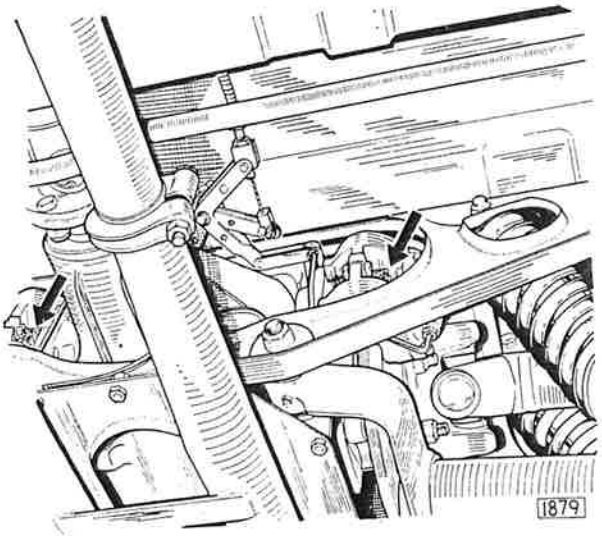

Fig. 9. Location of rear brake calipers

To enable the new friction pads to be fitted it will be necessary to force the pistons back into the cylinder blocks by means of the special tool (Part number 7840).

Insert the new friction pads into the caliper ensuring that the slot in the metal plate attached to each pad engages with the button in the centre of the piston.

Finally, refit the friction pad retainer and secure with the bolt and nut. Apply the footbrake a few times to operate the self-adjusting mechanism, so that normal travel of the pedal is obtained.

When all the new friction pads have been fitted, top up the supply tank to the recommended level.

RECOMMENDED BRAKE FLUIDS

Preferred Fluid

Dunlop Disc Brake Fluid (S.A.E. 70 R3)

Alternative Brake Fluids

Recognised brands of brake fluid conforming to Specification S.A.E. 70 R3 such as:

Castrol Girling Crimson Brake Fluid.

Lockheed Super Heavy Duty Brake Fluid.

In the event of deterioration of the rubber seals and hoses due to the use of an incorrect fluid, all the seals and hoses must be replaced and the system thoroughly flushed and refilled with one of the above fluids.

BRAKES

BLEEDING THE BRAKE SYSTEM

The following procedure should be adopted either for initial priming of the system or to bleed in service if air has been permitted to enter the system. This latter condition may occur if connections are not maintained, properly tightened, or if the master cylinder periodic level check is neglected. During the bleeding operation it is important that the level in the reservoir is kept topped up to avoid drawing air into the system. It is recommended that new fluid be used for this purpose.

Check that all connections are tightened and all bleed screws closed. Fill the reservoir with brake fluid of the correct specification. Attach the bleeder tube to the bleed screw on the near side rear brake and immerse the open end of the tube in a small quantity of brake fluid contained in a clean glass jar. Slacken the bleed screw and operate the brake pedal slowly backwards and forwards through its full stroke until fluid pumped into the jar is reasonably free from air bubbles. Keep the pedal depressed and close the bleed screw. Release the pedal.

Repeat for offside rear brake.

Repeat for front brakes.

Repeat the complete bleeding sequence until the brake fluid pumped into the jar is completely free from air bubbles.

Lock all bleed screws and finally regulate the fluid level in the reservoir. Apply normal working load on the brake pedal for a period of two or three minutes and examine the entire system for leaks.

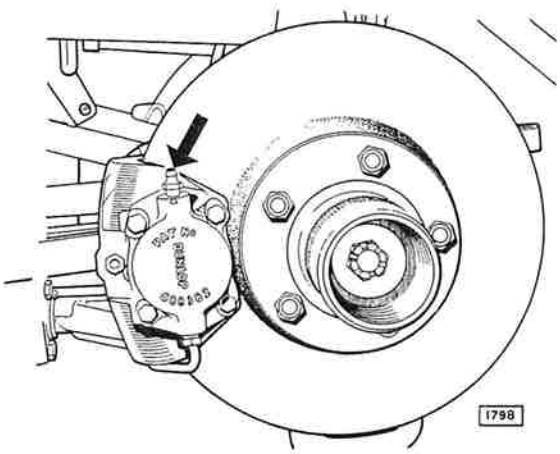

Fig. 10. Brake bleed nipple

BRAKE OVERHAUL—PRECAUTIONS

The complete brake system is designed to require the minimum of attention and providing the hydraulic fluid in the reservoir is not allowed to fall below the recommended level no defects should normally occur. Fluid loss must be supplemented by periodically topping up the reservoir with fluid of the same specification of that in the system.

The inclusion of air in a system of this type will be indicated by sluggish response of the brakes and spongy action of the brake pedal. This condition may be due to air induction at a loose joint or at a reservoir in which the fluid has been allowed to fall to a very low level. These defects must be immediately remedied and the complete system bled. Similarly, bleeding the system is equally essential following any servicing operation involving the disconnecting of part or whole of the hydraulic system.

The following instructions detail the procedure for renewal of component parts and for complete overhaul of the disc brakes, handbrakes and master cylinders. The units should be thoroughly cleaned externally before dismantling. Brake fluid should be used for cleaning internal components, and, except where otherwise stated in these notes, the use of petrol, paraffin or chemical grease solvents should be avoided as they may be detrimental to the rubber components. Throughout the dismantling and assembling operation it is essential that the work bench be maintained in a clean condition and that the components are not handled with dirty or greasy hands. The precision parts should be handled with extreme care and should be carefully placed away from tools or other equipment likely to cause damage. After cleaning, all components should be dried with lint-free rag.

When it is not the intention to renew the rubber components, they must be carefully examined for serviceability. There must be no evidence of defects such as perishing, excessive swelling, cutting or twisting, and where doubt exists comparison with new parts may prove to be of some assistance in making an assessment of their condition. The flexible pipes must show no signs of deterioration or damage and the bores should be cleaned with a jet of compressed air. No attempt should be made to clear blockage by probing as this may result in damage to the lining and serious restriction to fluid flow. Partially or totally blocked flexible pipes should always be renewed.

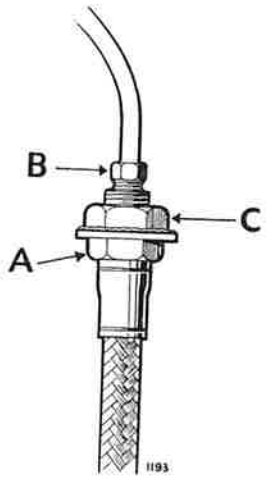

Fig. 11. Flexible hose connection. Hold hexagon "A" with spanner when removing or refitting locknut "C"

When removing or refitting a flexible pipe, the end sleeve hexagon (A, Fig. 11) should be held with the appropriate spanner to prevent the pipe from twisting. A twisted pipe will prove detrimental to efficient brake operation.

THE MASTER CYLINDERS

The master cylinders are mechanically linked to the footbrake pedal and, at a ratio proportional to the load applied, provide the hydraulic pressure necessary to operate the brakes. The components of the master cylinders are contained within the bore of a body which at its closed end has two 90° opposed integral pipe connection bosses. Integrally formed around the opposite end of the cylinder is a flange provided with two holes for the master cylinder attachment bolts. In the unloaded condition a spring loaded piston, carrying two seals (see Fig. 12) is held against the underside of a circlip retained dished washer at the head of the cylinder. A hemispherically ended push-rod seats in a similarly formed recess at the head of the piston. A fork end on the outer end of the push-rod provides for attachment to the pedal. A rubber dust excluder, the lip of which seats in a groove, shrouds the head of the master cylinder to prevent the intrusion of foreign matter.

A cylindrical spring support locates around the inner end of the piston and a small drilling in the end of the support is engaged by the stem of a valve. The larger diameter head of the valve locates in a central blind bore in the piston. The valve passes through the bore of a vented spring support and interposed between the spring support and an integral flange formed on the valve is a small coiled spring. A lipped rubber seal registers in a groove around the end of the valve. This assembly forms a recuperation valve which controls fluid flow to and from the reservoir.

When the foot pedal is in the OFF position the master cylinder is fully extended and the valve is held clear of the base of the cylinder by the action of the main spring. In this condition the master cylinder is in fluid communication with the reservoir, thus permitting recuperation of any fluid loss sustained, particularly during the bleeding operation of the brake system.

When a load is applied to the foot pedal the piston moves down the cylinder against the compression of the main spring. Immediately this movement is in excess of the valve clearance the valve closes under the influence of its spring and isolates the reservoir. Further loading of the pedal results in the discharge of fluid under pressure from the outlet connection, via the pipe lines to the brake system.

Removal of the load from the pedal reverses the sequence, the action of the main spring returns the master cylinder to the extended position.

Removal

Unscrew and withdraw the pipe unions from the ends of the master cylinders. Plug the holes to prevent the ingress of dirt or loss of fluid.

Remove the two bolts and locknuts from the top master cylinder flange.

Slacken the locknut on the top master cylinder push rod. Unscrew the push rod from the yoke and remove the master cylinder. Remove the two bolts and locknuts from the lower master cylinder flange.

Pull the lower master cylinder forward as far as possible. Remove the split pin and withdraw the clevis pin.

Remove the master cylinder.

Refitting is the reverse of the removal procedure.

Adjust the push rod on the top master cylinder to give $\frac{1}{16}''$ (1·58 mm) free play—this, by means of the balance lever will give $\frac{1}{32}''$ (·794 mm) free play to each master cylinder.

Tighten the locknut at the top master cylinder push rod. Bleed the braking system throughout.

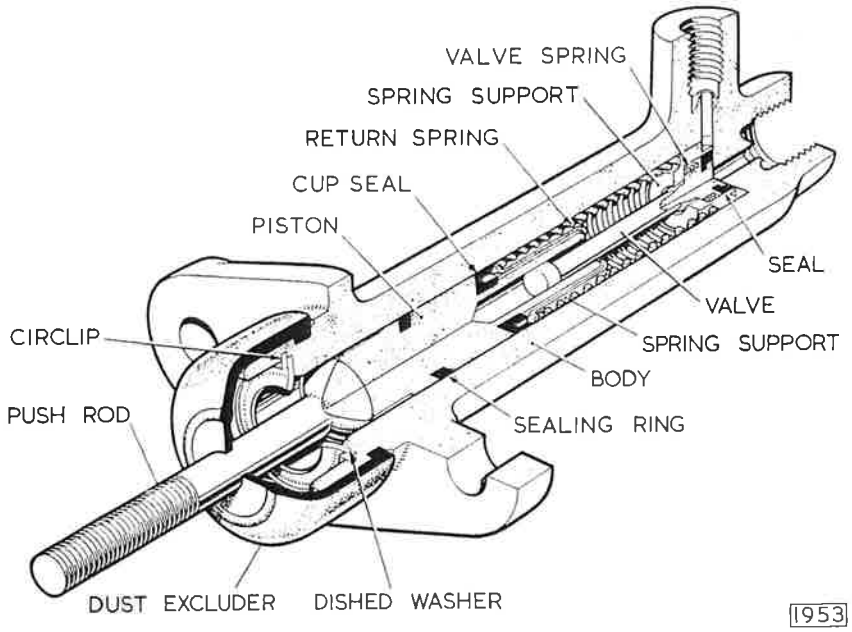

Fig. 12. Sectioned view of a master cylinder

Renewing the Master Cylinder Seals

Ease the dust excluder clear of the head of the master cylinder.

With suitable pliers remove the circlip; this will release the push rod complete with dished washer.

Withdraw the piston and remove both seals.

Withdraw the valve assembly complete with spring and supports. Remove the seal from the end of the valve.

Lubricate the new seals and the bore of the cylinder with brake fluid, fit the seal to the end of the valve ensuring that the lip registers in the groove. Fit the seals in their grooves around the piston.

Insert the valve head into the slotted hole in the spring support. Insert the piston into the other end of the spring support and centralise the valve head in the piston bore. Lubricate the piston with Castrol Rubber Grease H95/59. The piston, valve, main spring and spring supports must be inserted into the cylinder bore as a complete assembly.

Do not assemble the valve, main spring and spring supports into the cylinder bore without the piston.

Care should be taken when inserting the piston not to damage or twist the seals. The use of the fitting sleeve supplied with the master cylinder reconditioning kit is recommended.

Position the push-rod and depress the piston sufficiently to allow the dished washer to seat on the shoulder at the head of the cylinder. Fit the circlip and check that it fully engages the groove.

Fill the dust excluder with clean Castrol H95/59 Rubber Grease.

Reseat the dust excluder around the head of the master cylinder.

Free Travel of Master Cylinder Push-rods

When the brake pedal is in the "off" position, it is necessary that the pistons in the master cylinders are allowed to return to the fully extended position, otherwise pressure may build up in the system causing the brakes to drag or remain on.

To set the push-rods to the correct clearance, slacken the locknut at the top master cylinder push-rod and adjust the push-rod to give $\frac{1}{16}$" (1·58 mm) free travel—this by means of the balance lever will give $\frac{1}{32}$" (·794 mm) free travel to each master cylinder. Tighten the locknut at the top master cylinder push rod.

FRONT CALIPERS

Removal

In order to remove the front calipers, jack up the car and remove the road wheel. Disconnect the fluid feed pipe and plug the hole in the caliper. Discard the locking wire from the mounting bolts. Remove the caliper, noting the number of round shims fitted.

Refitting

Locate the caliper body (complete with the cylinder assemblies) in position and secure with two bolts.

Check the gap between each side of the caliper and the disc, both at the top and bottom of the caliper. The difference should not exceed ·010" (·25 mm) and round shims may be fitted between the caliper and the mounting plate to centralise the caliper body. Lock-wire the mounting bolts.

If not already fitted, fit the bridge pipe connecting the two cylinder assemblies. Connect the supply pipe to the cylinder body and ensure that it is correctly secured.

Bleed the brakes as described on page L.10.

Important: It is essential that the bridge pipe is fitted with the "hairpin" bend to the inboard cylinder block, that is, furthest from the road wheel (see Fig. 1). The bridge pipe carries a rubber identification sleeve marked "Inner Top".

REAR CALIPERS

Removal

The rear suspension unit must be removed in order to withdraw the rear calipers.

Proceed as described in Section K "Rear Suspension" and support the suspension unit under its centre.

Withdraw the split pin and remove the clevis pin joining the compensator linkage to the handbrake operating lever.

Remove the hydraulic feed pipe at the three-way union.

Remove the friction pads from the caliper as described on page L.16.

Remove the front hydraulic damper and road spring unit (as described in Section K "Rear Suspension") and remove the four self locking nuts from the halfshaft inner universal joint.

Withdraw the joint from the bolts and allow the hub carrier to move outwards—support the carrier in this position.

Note the number of camber shims between the universal joint flange and the brake disc.

Knock back the locking tabs and remove the pivot bolts securing the handbrake pad carriers to the caliper and the retractor plate. Withdraw the handbrake pad carriers from the aperture at the rear of the cross member.

Remove the keep plate on the caliper and using a hooked implement withdraw both brake pads.

Rotate the disc until the holes in the disc line up with the caliper mounting bolts.

Knock back the locking tabs (on early cars locking wire was used) and remove the mounting bolts.

Note the number of small circular shims fitted to the caliper mounting bolts between the caliper and the axle casing (Fig. 13)

The caliper can now be removed from the aperture at the front of the cross member.

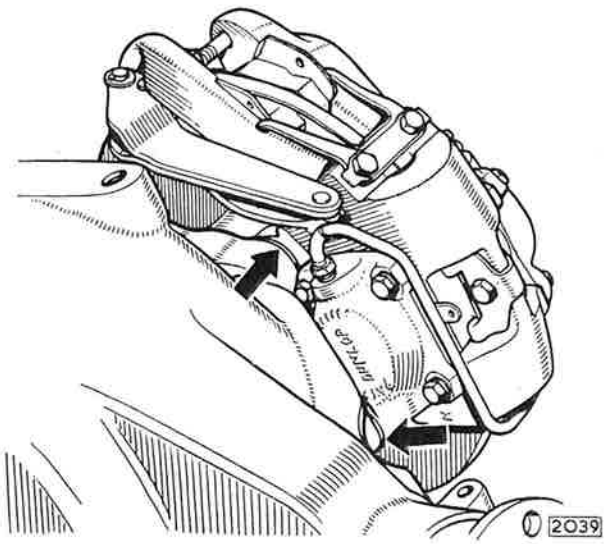

Fig. 13. Location of the rear brake caliper adjustment shims

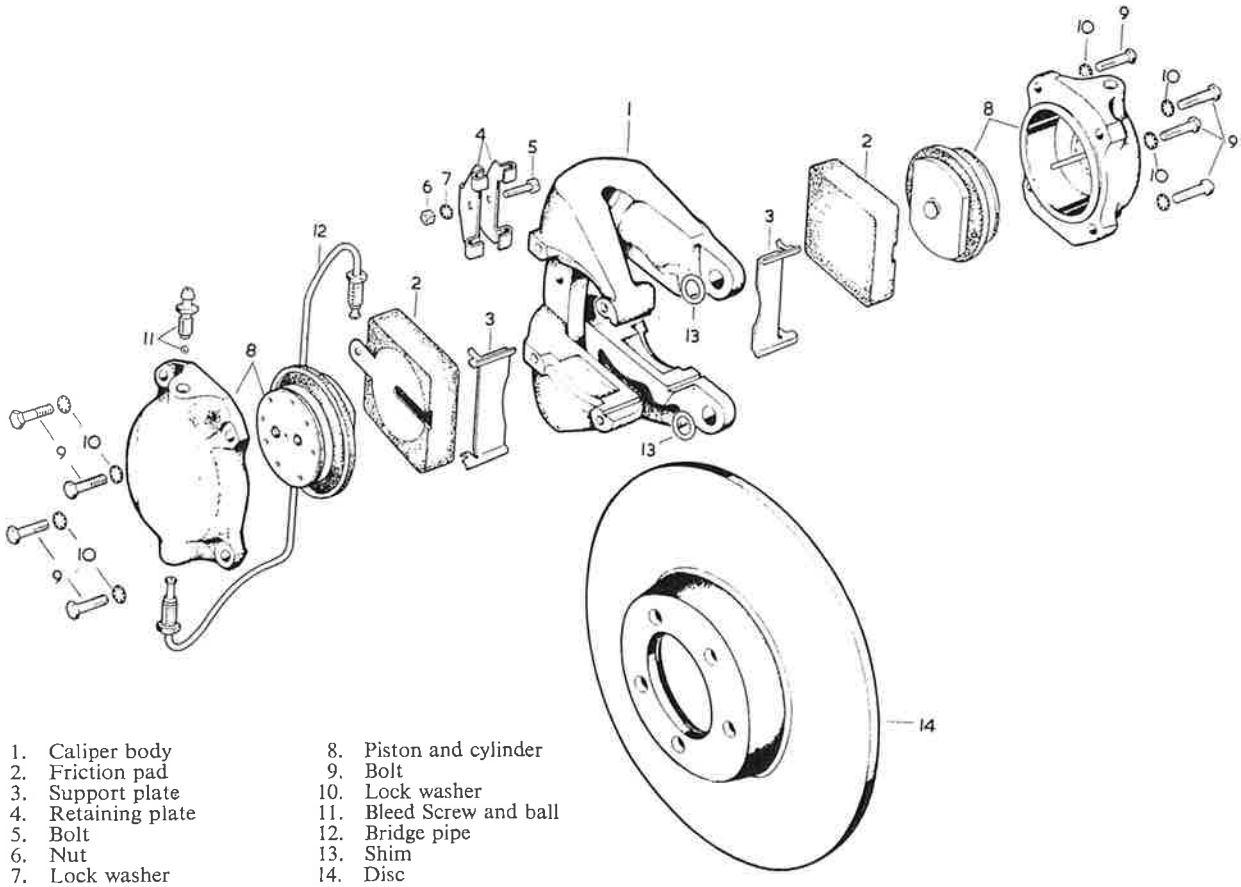

1. Caliper body
2. Friction pad
3. Support plate
4. Retaining plate
5. Bolt
6. Nut
7. Lock washer
8. Piston and cylinder
9. Bolt
10. Lock washer
11. Bleed Screw and ball
12. Bridge pipe
13. Shim
14. Disc

Fig. 14. Exploded view of a front brake caliper

Refitting

Refitting is the reverse of the removal procedure. The correct number of camber shims should be fitted.

When the halfshaft has been refitted check the caliper for centralisation as described in refitting the front calipers. Fit the fluid supply pipe and the bridge pipe if necessary. Bleed the braking system (as described on page L.10).

THE FRONT BRAKE DISCS

Removal

Jack up the car and remove the road wheel. Disconnect the flexible hydraulic pipe from the frame connection and plug the connector to prevent ingress of dirt and loss of fluid.

Discard the locking wire and remove the two caliper mounting bolts noting the number of round shims fitted between the caliper and mounting plate. Remove the caliper.

Remove the hub (as described in Section J "Front Suspension").

Remove the five self locking nuts and bolts securing the disc to the hub and remove the disc.

Refitting

Refitting is the reverse of the removal procedure. The hub bearing endfloat should be set (as described in Section J "Front Suspension") and the caliper fitted and centralised as described previously (page L.13). Reconnect the brakes and bleed the braking system (as described on page L.10).

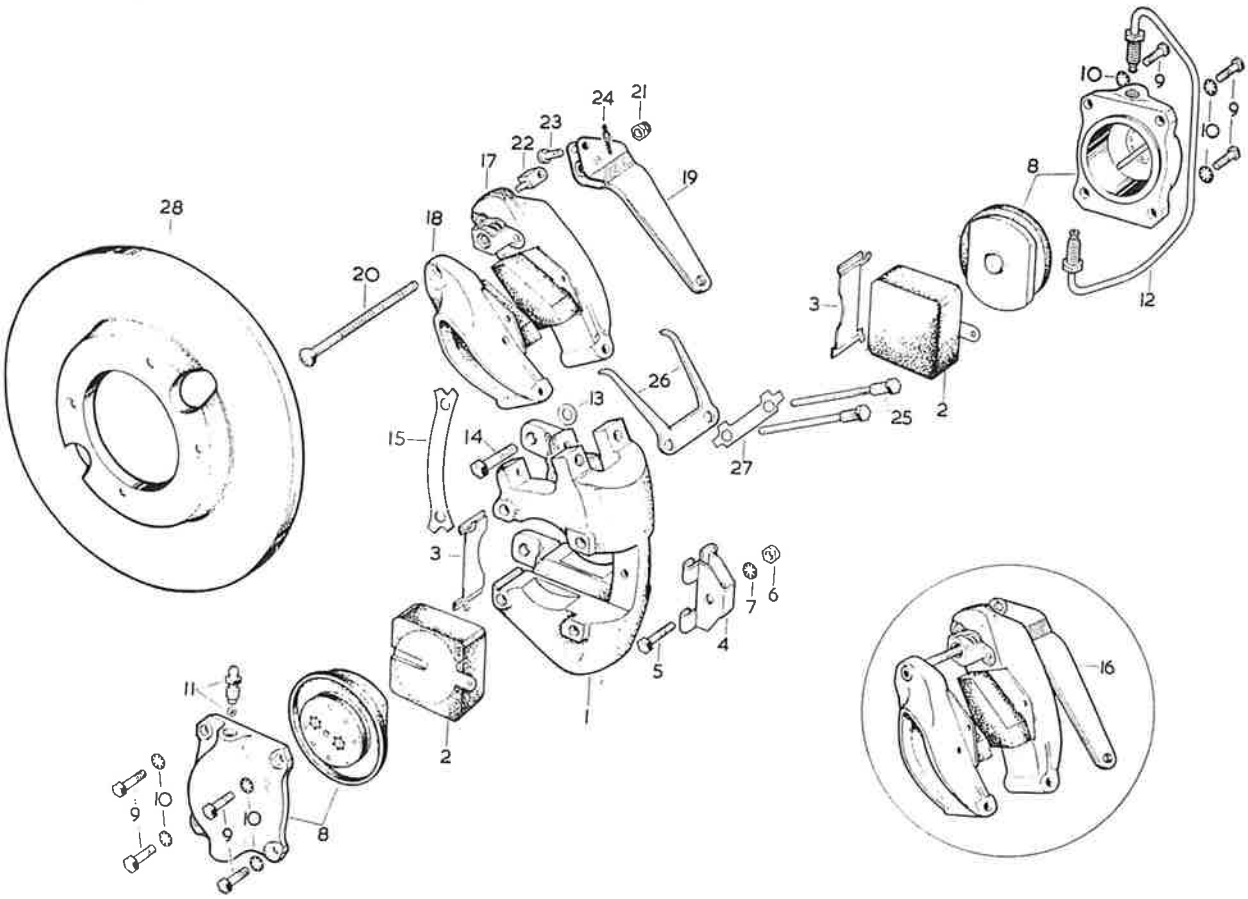

1. Caliper body
2. Friction pad
3. Support plate
4. Retaining plate
5. Bolt
6. Nut
7. Lock washer
8. Piston and cylinder
9. Bolt
10. Lock washer
11. Bleed screw and ball
12. Bridge pipe
13. Shim
14. Setscrew
15. Tab washer
16. Handbrake assembly
17. Inner pad carrier
18. Outer pad carrier
19. Operating lever
20. Bolt
21. Self locking nut
22. Pivot seat
23. Clevis pin
24. Split pin
25. Pivot bolt
26. Retractor plate
27. Tab washer
28. Disc

Fig. 15. Exploded view of a rear brake caliper

THE REAR BRAKE DISCS

Removal

Remove the rear suspension unit (as described in Section K "Rear Suspension").

Invert the suspension and remove the two hydraulic damper and road spring units (as described in Section K "Rear Suspension").

Remove the four steel type self locking nuts securing the halfshaft inner universal joint and brake disc to the axle output shaft flange.

Withdraw the halfshaft from the bolts, noting the number of camber shims between the universal joint and the brake disc.

Knock back the tabs and unscrew the two pivot bolts securing the hand brake pad carriers to the caliper. Remove the pivot bolts and the retractor plate (Fig. 15).

Withdraw the handbrake pad carriers from the aperture at the rear of the cross members.

Knock back the tabs at the caliper mounting bolts (on earlier cars locking wire was used).

Remove the keeper plate on the caliper and using a hooked implement, withdraw both brake pads.

Disconnect the brake fluid feed pipe at the caliper.

Unscrew the mounting bolts through the access holes in the brake disc.

Withdraw the bolts, noting the number and position of the round caliper centralizing shims.

Withdraw the caliper through the aperture at the front of the cross member.

Tap the halfshaft universal joint and brake disc securing bolts back as far as possible.

Lift the lower wishbone, hub carrier and halfshaft assembly upwards until the brake disc can be withdrawn from the mounting bolts.

Refitting

Refitting the brake discs is the reverse of the removal procedure. The securing bolts must be knocked back against the drive shaft flange when the new disc has been fitted.

Care must be taken to refit the caliper centralizing shims in the same position. The centralization of the caliper should be checked (as described in "Refitting the Calipers") when the halfshaft has been refitted.

Refit the rear suspension (as described in Section K "Rear Suspension").

Bleed the brakes as described on page L.10.

BRAKE DISC "RUN-OUT"

Check the brake discs for "run-out" by clamping a dial test indicator to the stub axle carrier for the front discs and the cross member for the rear discs. Clamp the indicator so that the button bears on the face of the disc. "Run-out" should not exceed ·006" (·15 mm) gauge reading. Manufacturing tolerances on the disc should maintain this truth and in the event of "run-out" exceeding this value, the components should be examined for damage.

Note: It is most important that the endfloat of the front hubs and the rear axle output shafts is within the stated limits otherwise the brakes may not function correctly.

The front hub endfloat adjustment is described in Section J "Front Suspension". The endfloat adjustment of the rear axle output shafts is described in Section H "Rear Axle".

RENEWING THE FRICTION PADS

Brake adjustment is automatic during the wearing life of the pads. The pads should be checked for wear every 5,000 miles (8,000 km) by visual observation and measurement; when wear has reduced the pads to the minimum permissible thickness of ¼" (7 mm) the pad assemblies (complete with securing plates) must be renewed. If checking is neglected the need to renew the pads will be indicated by a loss of brake efficiency. The friction pads fitted have been selected

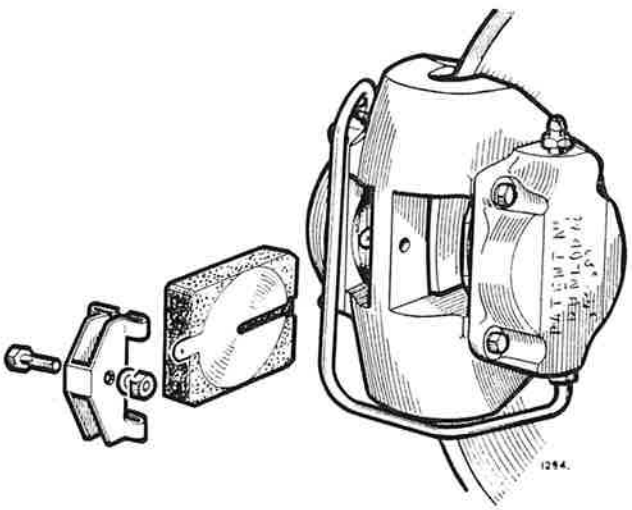

Fig. 16. Friction pad removal

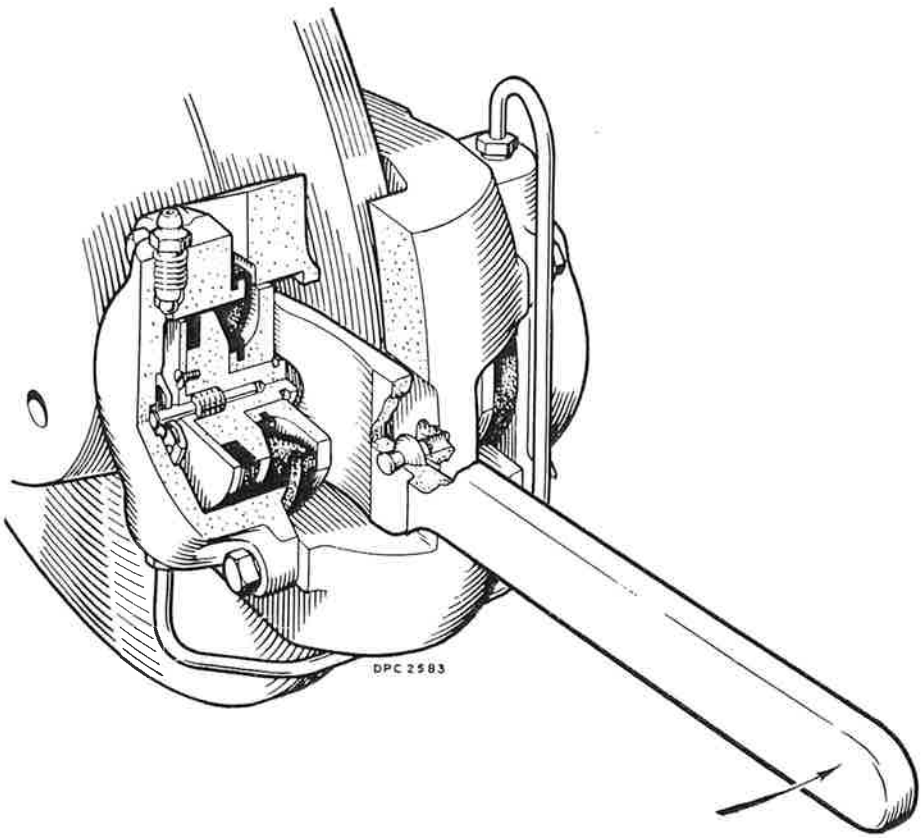

Fig. 17. Resetting the pistons with the special tool (Part No. 7840)

as a result of intensive development, and it is essential at all times to use only factory approved material. To fit the new friction pad assemblies proceed as follows:

Remove the nut, washer and bolt securing the keep plate and withdraw the plate.

With a suitable hooked implement engaged in the hole in the lug of the securing plate withdraw the defective pad assemblies.

Thoroughly clean the backing plate, dust seal and the surrounding area of the caliper.

With the aid of the special tool, press in the piston assemblies to the base of the cylinder bores as shown in Fig. 17.

Note: Before doing this, it is advisable to half empty the brake supply tank, otherwise forcing back the friction pads will eject fluid from the tank with possible damage to the paintwork. When all the new friction pads have been fitted, top up the supply tank to the recommended level.

Insert the forked end of the piston resetting lever into the space between the caliper bridge and one of the piston backing plates, with the fork astride the projecting piston spigot and its convex face bearing on the piston backing plate. Locate the spigot end of the lever pin in the keep plate bolt hole in the bridge. Pivot the lever about the pin to force the piston to the

base of its cylinder. Insert the new friction pad assembly.

Replace the keep plate and secure it with the bolt, washer and nut.

Renewing the Brake Piston Seals—Early Type

Leakage past the piston seals will be denoted by a fall in level of the fluid reservoir or by spongy pedal travel. It is recommended that the dust seal be renewed when fitting a new piston seal. Proceed as follows:

Remove the caliper as described on page L.13.

Withdraw the brake pads as described in the previous paragraphs.

Disconnect and blank off the supply pipe and remove the bridge pipe.

Remove the bolts securing the cylinder blocks to the caliper and withdraw the cylinder blocks. Thoroughly clean the blocks externally before proceeding with further dismantling.

Disengage the dust seal from the groove around the cylinder block face.

Connect the cylinder block to a source of fluid supply and apply pressure to eject the piston assembly.

Remove the screws securing the plate to the piston, lift off the plate and piston seal, withdraw the retractor bush from within the piston bore. Carefully cut away and discard the dust seal.

Support the backing plate on a bush of sufficient bore diameter to just accommodate the piston. With a suitable tubular distance piece placed against the end of the piston spigot and located around the shouldered head, press out this piston from the backing plate. Care must be taken during this operation to avoid damaging the piston.

Engage the collar of a new dust seal with the lip on the backing plate avoiding harmful stretching.

Locate the backing plate on the piston spigot and, with the piston suitably supported, press the backing plate fully home.

Insert the retractor bush into the bore of the piston. Lightly lubricate a new piston seal with brake fluid, and fit it to the piston face. Attach and secure the plate with the screws and peen lock the screws.

Check that the piston and the cylinder bore are thoroughly clean and show no signs of damage. Locate the piston assembly on the end of the retractor pin. With the aid of a hand press slowly apply an even pressure to the backing plate and press the assembly into the cylinder bore. During this operation ensure the piston assembly is in correct alignment in relation to the cylinder bore, and that the piston seal does not become twisted or trapped as it enters. Engage the outer rim of the dust seal in the groove around the cylinder block face. Ensure that the two support plates are in position.

Re-assemble the cylinder blocks to the caliper. Fit the bridge pipes ensuring that they are correctly positioned. Remove the blank and reconnect the supply pipe. Bleed the hydraulic system.

Important: It is essential that the bridge pipe is fitted with the "hairpin" bend end to the inboard cylinder block, that is, furthest from the road wheel (see Fig. 1). The bridge pipe carries a rubber identification sleeve marked "Inner Top".

Renewing the Brake Piston Seals—Later Type

The later type cylinder blocks may be distinguished by the letter "C" cast into the block body at the inlet union hole.

Remove the caliper as described on page L.13.

Withdraw the brake pads as described under "Renewing the Friction Pads".

Disconnect and blank off the supply pipe and remove the bridge pipe.

Remove the bolts securing the cylinder blocks to the caliper and withdraw the cylinder blocks. Thoroughly clean the blocks externally before proceeding with further dismantling.

Disengage the dust seal from the groove around the cylinder block face.

Connect the cylinder block to a source of fluid supply and apply pressure to eject the piston assembly.

Using a blunt screwdriver carefully push out and remove the piston seal and the dust seal. It is impossible to strip the piston down further.

Check that the piston and cylinder bore are thoroughly clean and show no signs of damage.

When replacing the piston and dust seals, first lightly lubricate with brake fluid, then place on the piston using the fingers only. Locate the retractor pin in the retractor bush in the piston, then with even pressure press the piston assembly into the cylinder bore. During this operation ensure the piston assembly is in correct alignment in relation to the cylinder bore and that the piston seal does not become twisted or trapped as it enters. Engage the outer rim of the dust

seal in the groove around the cylinder block face. Ensure that the two support plates are in position.

Re-assemble the cylinder blocks to the caliper. Fit the bridge pipes, ensuring that they are correctly positioned. Connect the supply pipe and bleed the hydraulic system (as described on page L.10).

Important: It is essential that the bridge pipe is fitted with the "hairpin" bend end to the inboard cylinder block, that is, furthest from the road wheel (see Fig. 1). The bridge pipe carries a rubber identification sleeve marked "Inner Top".

THE HANDBRAKE—(Early Cars)

Description (Fig. 15)

The mechanical handbrake units are mounted on and above the caliper bodies of the rear brakes by means of pivot bolts and forked retraction plates.

Each handbrake unit consists of two carriers, one each side of the brake disc and attached to the inside face of each carrier by means of a special headed bolt is a friction pad. The free end of the inner pad carrier is equipped with a pivot seat to which the forked end of the operating lever is attached. A trunnion is also mounted within the forked end of the operating lever and carries the threaded end of the adjuster bolt on the end of which is a self-locking nut. Located on the shank of the adjuster bolt and in a counterbore in the inside face of the inner pad carrier is the operating lever return spring held under load by a nut retained by a spring plate riveted to the inside face of the inner carrier. The adjuster bolt passes through the outer pad carrier and its hemispherically shaped head seats in a suitable recess in the outer carrier.

The handbrake units require periodical adjustment and a hexagonal recess for this purpose is provided in the head of the adjuster bolt.

Handbrake Friction Pads—Renewing

With the friction pad carriers removed withdraw the friction pad by slackening the nuts in the outer face of each carrier and utilizing a hooked tool in the drilling of the friction pad securing plate. Insert two friction pad assemblies into the friction pad carriers, short face upwards, ensuring each pad securing plate locates the head of the retaining bolt protruding through the inside face of the pad carriers and secure by tightening the nuts on the outside faces. Repeat with the second handbrake. Refit the handbrake friction pad carriers as previously described and reset the handbrake as described under "Routine Maintenance" (page L.8).

Friction Pad Carriers—Removal

With the car on a ramp, disconnect the handbrake compensator linkage from the handbrake operating lever at the front of the rear suspension assembly by discarding the split pin and withdrawing the clevis pin. Lift the locking tabs and remove the pivot bolts and retraction plate. Remove the friction pad carriers from the caliper bridge by moving them rearwards around the disc and withdrawing from the rear of the rear suspension assembly. Repeat with the second handbrake.

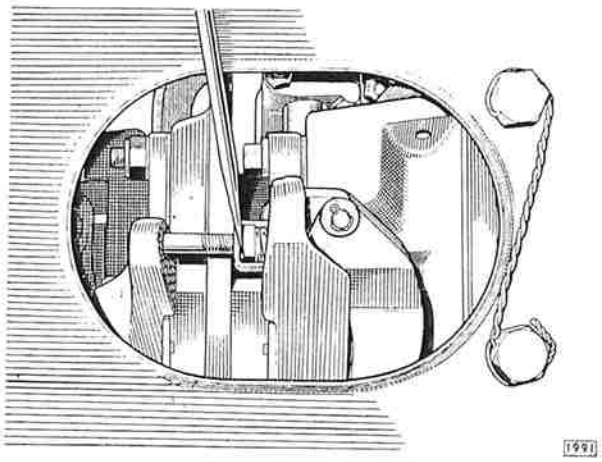

Fig. 18. Preloading the handbrake caliper return spring with a screwdriver

Friction Pad Carriers—Dismantling

Separate the friction pad carriers by withdrawing the adjuster bolt, exercising care to control the run of the self-locking nut in the forked end of the operating lever. Detach the pivot seat from the forked end of the operating lever by discarding the split pin and withdrawing the clevis pin. Do not attempt to remove the spring or squared nut, if either are damaged the pad carrier should be renewed. The pressings of the operating lever are spot welded together with the trunnion block in position, thus it cannot be removed.

Friction Pad Carriers—Assembling (Fig. 15)

Before re-assembling the friction pad carriers, ensure that the trunnion block has complete freedom of movement in the forked end of the operating lever. Ensure that the pin of the pivot seat is a sliding fit

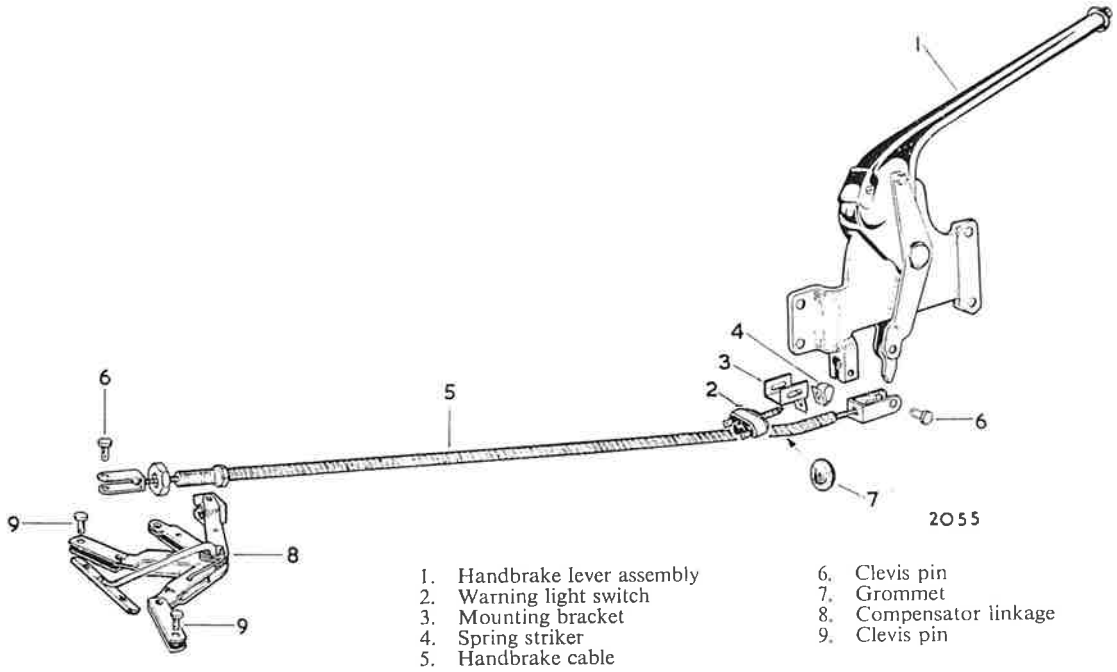

Fig. 19. Exploded view of the handbrake actuating mechanism

in the drilling at the extreme end of the friction pad carrier. The pivot seat must also be a sliding fit between the forked ends of the operating lever. The clevis pin must be a sliding fit both through the eye of the pivot and through the holes in the forked ends of the operating lever.

Assemble the operating lever and the pivot seat but do not fit this assembly to the inner pad carrier at this stage.

Pass the adjusting bolt through the outer pad carrier and screw into the retaining nut and spring. Fit the operating lever and pivot assembly to the inner pad carrier and screw in adjusting bolt until it comes flush with the outer face of the trunnion block. The spring should then be preloaded by inserting the blade of a screwdriver between the retaining nut and the cage (Fig. 18). The adjusting screw should then be screwed out until the end again becomes flush with the outer face of the trunnion block. Place the self locking nut on the trunnion block and screw the adjuster bolt into it ensuring that it engages the self locking nut with the first thread. When the adjuster bolt becomes flush with the second face of the self locking nut, withdraw the preloading screwdriver.

Refitting

Refitting is the reverse of the removal procedure but particular attention must be given to the following points.

That the locking plates under the heads of the two pad carrier bolts are replaced with new ones, even though the second pair of locking tags have still to be used.

The fork shaped retraction plates should be reset by lifting the locking tabs, slackening and tightening the pivot bolts and locking the bolt heads by turning up the tabs on the locking plate.

Removal and Refitting the Handbrake Cable

Remove the split pin and withdraw the clevis pin from the inner cable fork at the compensator linkage. Release the locknut and unscrew the outer cable from the retaining block; remove the spring holding the cable away from the propeller shaft.

Remove the four nuts securing each seat to the seat slides and withdraw the seats. Remove the two screws one each side of the radio control panel which secure the ashtray. Remove the two screws which secure each side of the radio control panel to the brackets under the instrument panel. Withdraw the radio control panel casing and remove the three setscrews securing the propeller shaft tunnel cover to the body. Place the gear lever as far forward as possible and pull the handbrake into the "on" position. Unscrew the gear lever knob and locknut. Slide the propeller shaft tunnel cover over the gear and handbrake levers and remove the tunnel cover.

Fig. 20. Brake fluid level and handbrake warning light

Remove the split pin and withdraw the clevis pin from the forkend at the handbrake lever. Slacken the pinch bolt and remove the outer cable from the retaining block. Remove the grommet and withdraw the handbrake cables from the rear end of the propeller shaft tunnel.

Refitting is the reverse of the removal procedure. It should be noted, however, that when fitting the outer cable to the retaining block at the compensator, the cable must be screwed in with the longer end of the block facing towards the front of the car.

Screw the adaptor in until there is no slack in the cable then tighten the locknut and check the handbrake pad clearance with a ·004" (·10 mm.) feeler gauge as described in "Routine Maintenance" (page L.8).

THE BRAKE FLUID LEVEL AND HANDBRAKE WARNING LIGHT

Description (Fig. 20)

The brake fluid level and handbrake warning light, situated in the side facia panel, will indicate after the ignition has been switched on whether the brake fluid in the reservoir is at a low level or the handbrake has not reached the fully off position. This is effected by three switches, one in the top of each of the fluid reservoirs and a third on the handbrake lever, being in circuit with a single warning lamp which is included in the ignition circuit.

When the ignition is switched on and while the handbrake remains applied, the warning light will glow but will become extinguished when the handbrake is fully released with the brake fluid in the reservoir at a high level.

Should the warning light continue to glow after the handbrake has been fully released, it indicates that the brake fluid in the reservoir is at a very low level and the cause must be immediately determined and eliminated. Should the brake fluid be at a high level, the cause of the handbrake remaining on must be investigated.

Handbrake Warning Light Switch—Setting

A bracket mounted interrupter switch is attached to the handbrake outer cable retaining block on the propeller shaft tunnel below the handbrake lever assembly. An extension of the handbrake lever contacts a spring steel lever which depresses the plunger of the interrupter switch when the handbrake is in the "off" position. It is necessary to remove the propeller shaft tunnel cover as described under "Removal of the Handbrake Cable" to examine the interrupter switch.

Should the warning light fail to extinguish when the handbrake is in the fully "off" position, and the brake fluid levels in the reservoirs are correct, check that the spring steel lever is contacting the interrupter switch correctly before examining the leads for short circuiting.

Examine the handbrake for full travel and the spring steel bracket for misalignment. Apply the handbrake and switch on the ignition, when the warning light should glow. If the warning light fails to glow when the handbrake is applied and the ignition is switched on, before checking the warning light bulb ensure that the spring steel lever is clearing the interrupter switch plunger. If it is not doing so, bend the lever away from the plunger or renew as necessary.

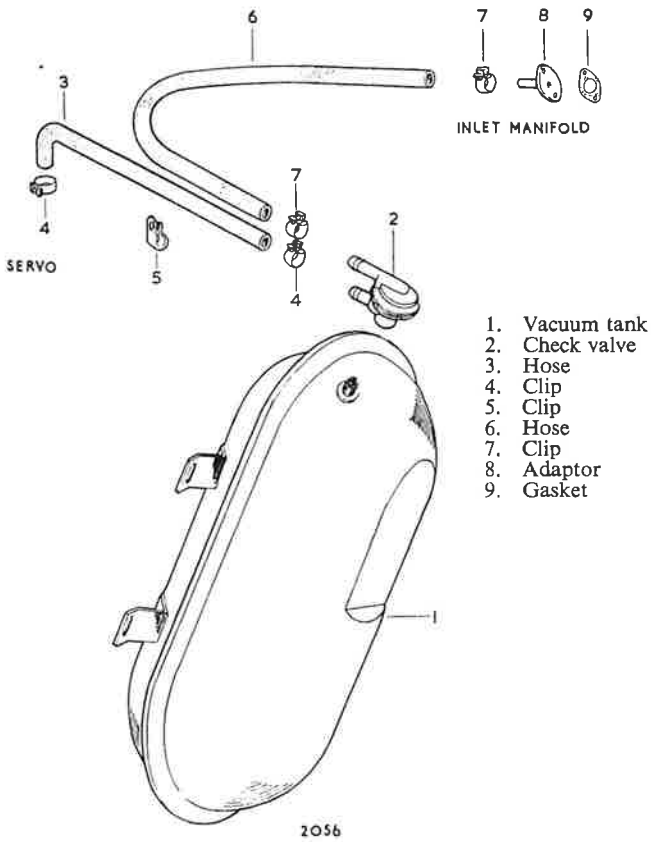

Fig. 21. Exploded view of the vacuum reservoir and system

THE VACUUM RESERVOIR AND CHECK VALVE

Description (Fig. 21)

The vacuum reservoir is incorporated in the vacuum line between the inlet manifold and vacuum servo unit. It is located on the bulkhead on the offside of the engine below the carburetter trumpets. Its purpose is to provide a reserve of vacuum in the event of braking being required after the engine has stalled.

A vacuum check valve is fitted at the top end of the front face of the vacuum reservoir, with the topmost connection communicating with the inlet manifold, while the second connection communicates directly with the vacuum port of the vacuum servo unit, thus any reduction of pressure inside the reservoir is conveyed to the vacuum servo unit.

Included in the inlet port of the check valve is a flat rubber spring-loaded valve and when there is a depression in the inlet manifold the valve is drawn away from its seat against its spring loading, thus the interior of the reservoir becomes exhausted. When the depression in the reservoir becomes equal to that of the inlet manifold, the valve spring will return the valve to its seat, thus maintaining the highest possible degree of vacuum in the reservoir.

Removal and Refitting

Detach the tray below the vacuum reservoir by removing four drive screws and two nuts and setscrews. Slacken the clips and remove the two pipes from the check valve. Remove the four setscrews holding the vacuum reservoir to the bulkhead and remove the reservoir from below. Unscrew the check valve from the top of the vacuum reservoir when necessary.

Refitting is the reverse of the removal procedure but particular attention must be given to the following points:

(i) That the rubber hose from the vacuum servo unit is attached to the pipe of the check valve

having the two grooves in its body; it is also the pipe nearest the screwed connection.

(ii) That the rubber hose from the inlet manifold is attached to the pipe of the check valve having two annular ribs in its body; this pipe is moulded into the centre of the check valve cap.

THE BRAKE/CLUTCH PEDAL BOX ASSEMBLY

Removal and Refitting

Remove the air cleaner elbow and the carburetter trumpets, also slacken the rear carburetter float chamber banjo nut and bend the petrol feed pipe towards the float chamber, and remove throttle rods from the bell crank above the servo bellows, on right hand drive models only.

Remove servo vacuum pipe and clips.

Drain the brake and clutch fluid reservoirs, remove fluid inlet pipes from the brake and clutch master cylinders and plug the holes.

Remove the brake fluid warning light wires and remove the brake and clutch fluid reservoirs.

Remove the fluid outlet pipes from the brake and clutch master cylinder and plug the holes. Remove the brake master cylinders as described on page L.11.

From inside the car remove brake and clutch pedal pads, remove dash casing (as described in Section N "Body and Exhaust").

Remove six self-locking nuts and one plain nut and shakeproof washer holding the servo assembly to the bulkhead.

Compress the servo bellows by hand, lift the servo assembly and remove from the car by twisting the unit approximately 90° clockwise to allow the pedals to pass through the hole in the bulkhead.

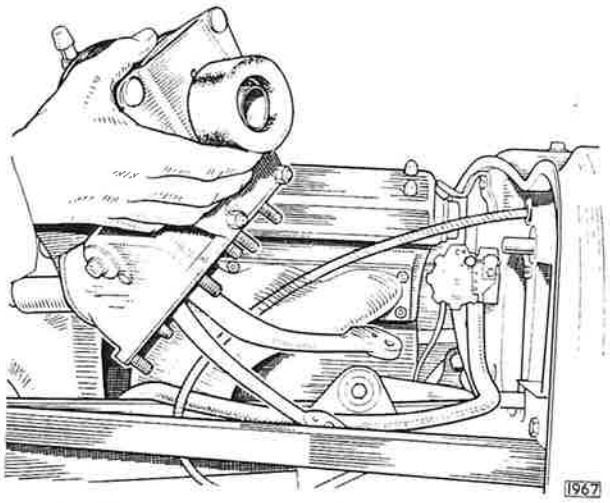

Fig. 22. Removing the Brake/Clutch pedal box assembly

Remove the bulkhead rubber seal.

Remove the four nuts and one setscrew fastening the brake master cylinder mounting bracket.

Remove the self-locking nut from the serrated pin and remove the conical spring and retaining washer.

Remove the pinch bolt from the brake pedal lever.

Remove the circlip and washer from the pedal shaft.

Remove the vacuum checkpoint from the front valve housing.

Remove the brake master cylinder support bracket with linkage and pedal shaft assembly from the pedal housing. Retain the fibre washer from between the brake and clutch pedals.

Remove the throttle bell crank bracket on right hand drive models by removing the four self locking nuts.

Remove the brake vacuum servo assembly.

Refitting is the reverse of the removal procedure, ensure that the rubber seal is in place over the exhausting tube between the servo bellows and the bulkhead.

When refitting the securing nuts inside the car ensure that the plain nut and shakeproof washer go on the short stud at the front centre.

When replacing the fluid reservoirs ensure that the brake fluid warning light wires are fitted with one feed wire (red and green) and one earth wire (black) to each reservoir cap.

Ensure that the petrol feed pipe is clear of the rear float chamber before tightening the banjo union nut.

Ensure that all clevis pins enter freely and without force, failure to do this may prevent the system operating in the "poised position".

Bleed the brake and clutch hydraulic systems.

Dismantling the Brake Linkage

Remove the bulkhead rubber seal (42, Fig. 23).

Remove the four nuts and one setscrew fastening the brake master cylinder mounting bracket (35).

Remove the self-locking nut from the serrated pin (21) and remove the conical spring (24) and retaining washer.

Remove the pinch bolt from the brake pedal lever (1).

Remove the circlip (9) and washer (10) from the pedal shaft.

Remove the vacuum check point union from the front valve housing.

Remove the brake master cylinder support bracket with linkages and pedal shaft assembly from the pedal housing (4). Retain the fibre washer from between the brake and clutch pedals.

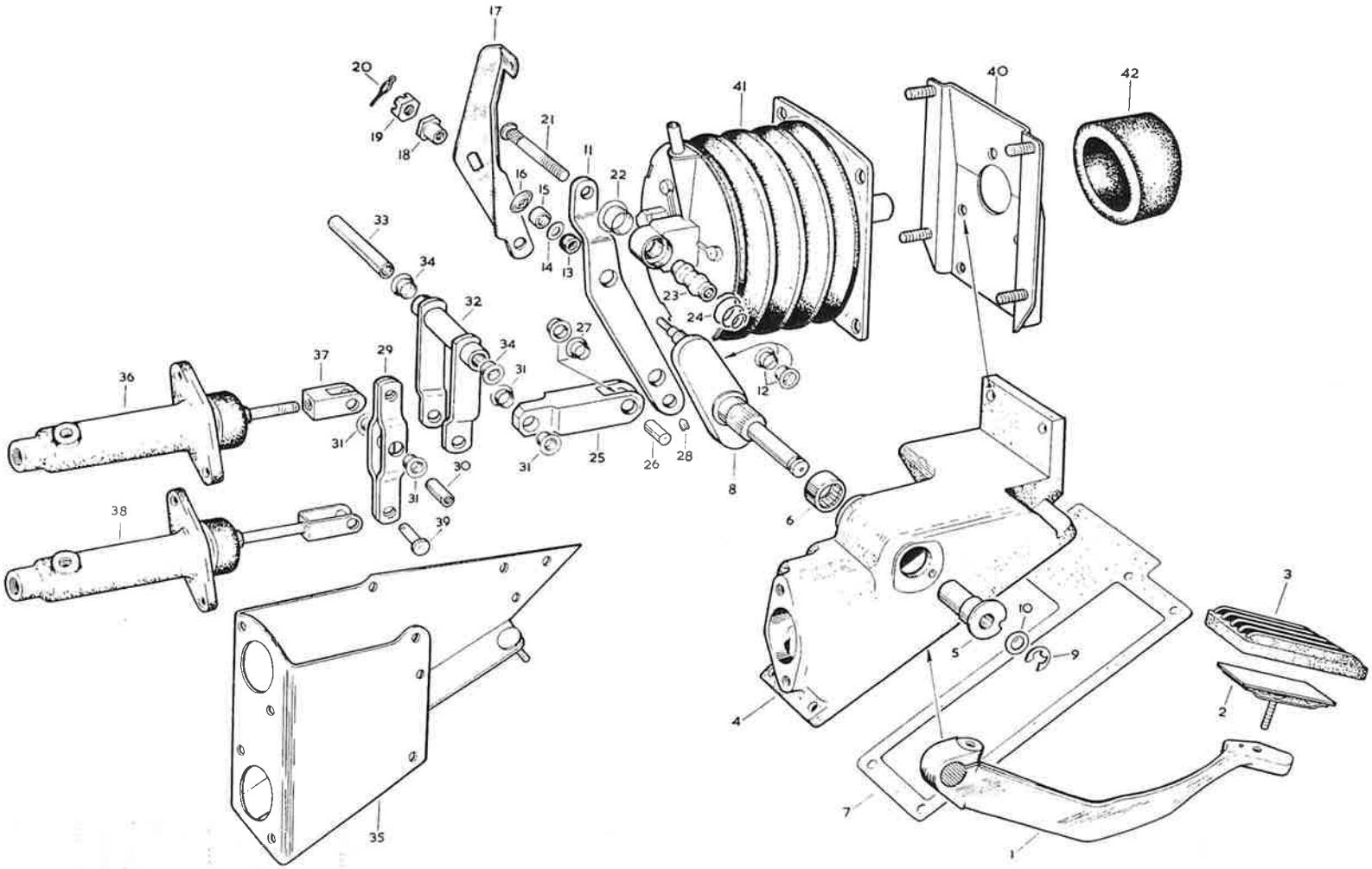

1. Brake pedal
2. Steel pad
3. Rubber pad
4. Pedal housing
5. Bush
6. Bearing
7. Gasket
8. Pedal shaft and pin
9. Circlip
10. Washer
11. Power lever
12. Nylon bush
13. Rubber buffer
14. Plain washer
15. Spacing collar
16. Belleville washer
17. Operating lever
18. Eccentric barrel nut
19. Slotted nut
20. Split pin (Return spring on later models)
21. Serrated pin
22. Nylon bush
23. Eccentric bush
24. Spring
25. Fork end
26. Joint pin
27. Nylon bush
28. Grub screw
29. Balance link
30. Spacing tube
31. Nylon bush
32. Pivot bracket
33. Sleeve
34. Nylon bush
35. Mounting bracket
36. Rear brake master cylinder
37. Fork end
38. Front brake master cylinder
39. Clevis pin
40. Mounting bracket
41. Servo assembly
42. Rubber seal

Fig. 23. Exploded view of the brake controls

Remove the throttle bell crank bracket on right hand drive models.

Remove the four self-locking nuts and remove the brake vacuum servo assembly (41).

Remove the setscrews and brass bush (5) from the pedal housing. Remove the split pin and withdraw the clevis pin. Remove the clutch master cylinder and withdraw the clutch pedal. The caged needle roller bearing (6) should be pressed out and replaced if necessary.

Remove the self-locking nut and withdraw the bolt from the pivot bracket (32). Remove the brake master cylinder support bracket.

Remove the servo operating arm return spring (20). Remove the castellated nut (19) and eccentric barrel nut (18).

Remove the self-locking nut and flat washer from the lower pedal shaft stud and withdraw the servo operating arm (17).

Remove the bellville washer (16), spacing collar (15), chamfered washer (14) and rubber buffer (13).

Remove the power lever (11), from the pedal shaft and pin assembly (8) and renew the nylon bushes (12) if necessary.

Remove the steel bush (23) and nylon bush (22), press out the serrated pin if necessary.

Remove the self locking nut and bolt attaching the two-way fork (25) to the pivot bracket and balance link and dismantle.

Remove the upper brake master cylinder fork end (37) by removing the split pin and withdrawing the clevis pin.

Press out the spacing sleeves (30) and (33) from the compensator fork and lever and renew the nylon bushes (31) and (34) if necessary.

Remove the grub screw (28) and press out the joint pin (26) from the two-way fork. Renew the nylon bushes (27) and (31) if necessary.

Remove the four plain nuts and shakeproof washers and remove the servo mounting bracket (40) from the pedal block.

Reassembly

Re-assembly is the reverse of the dismantling procedure, ensure that all linkages are very free especially the balance link and the servo operating arm.

When replacing the pedal shaft assembly on the pedal lever ensure that the pedal pad is lined up with the clutch pedal pad and also that the brake pedal lever does not foul the pedal box on full stroke.

Ensure that the fibre washer is in place between the brake and clutch pedal.

Reset the air valve operation with the eccentric barrel nut as described under "Servicing the Unit—Valve adjusting eccentric out of adjustment" (page L.29).

BELLOWS TYPE VACUUM SERVO

Description

The power unit consists of an air-vacuum bellows which expands or contracts as the air pressure is varied by the introduction of vacuum or atmosphere. One end of the assembly is connected to the dash unit and the other end to the power unit and pedals. A reserve tank is incorporated in the system to give an increased number of pedal applications. The valves which control the air pressure are located in the valve housing, and are actuated by the movement of the brake pedal. As the pedal is depressed the air valve is closed, the vacuum valve is opened and air is evacuated out of the bellows by the depression in the inlet manifold causing the bellows to contract. This in turn exerts a pull on the power lever in proportion to the pedal pressure applied by the driver; it thus provides the power assistance to the driver in depressing the pedal and applying the brakes.

It is therefore a "pedal-assistance" type unit operating in conjunction with the conventional hydraulic brake system.

In the event of no assistance as with the loss of vacuum, the hydraulic brakes can still be applied in the normal manner. Lifting the pedal pressure closes the vacuum and opens the air valve to the atmosphere, so destroying the vacuum and releasing the brakes. If the pedal pressure is partially applied and then held, both valves are closed and the vacuum remains constant until pedal is further depressed or released completely. This is known as the "poised position".

BRAKES

Operation

1. Brakes are in the "off" position. The bellows are fully extended and filled with air admitted through the air filter and air valve, which is open.
   The vacuum valve is closed, sealing the bellows from the vacuum supply. It will be noted, however, that vacuum is being applied at all times against the vacuum valve, so that any opening of the valve will immediately begin to exhaust air from the bellows.

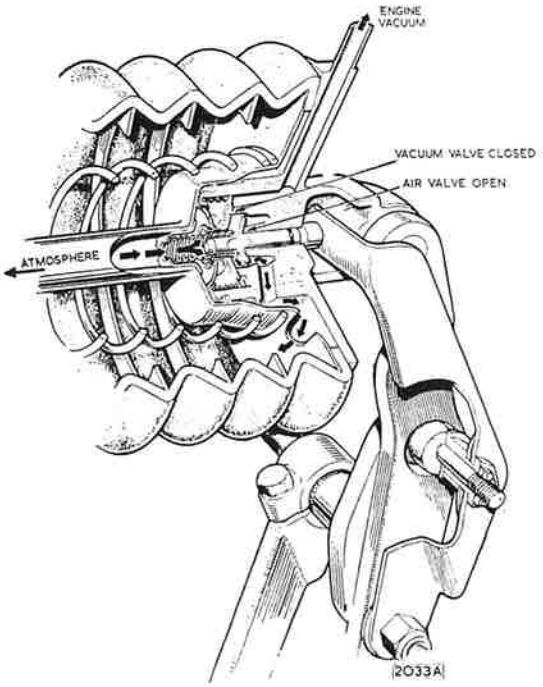

Fig. 24. Servo operation—"Brakes off" position

2. Applying the Brakes. When the brake pedal is operated, the operating lever applies pressure to the cap of the air valve in the servo. This overcomes the air valve spring and closes the air valve. Continued movement opens the vacuum valve and admits vacuum to the bellows, causing it to contract. Because of its linkage to the power lever, the assisted movement is transmitted to the push rod of the master cylinder to apply the brakes The applying movement of the bellows tends to carry the air valve button away from the trigger; thus the continuing exhaust of air from the bellows will only occur with greater pressure of the brake pedal.
   When pedal pressure is held, both valves immediately close and the servo remains poised until pressure is again increased or released.

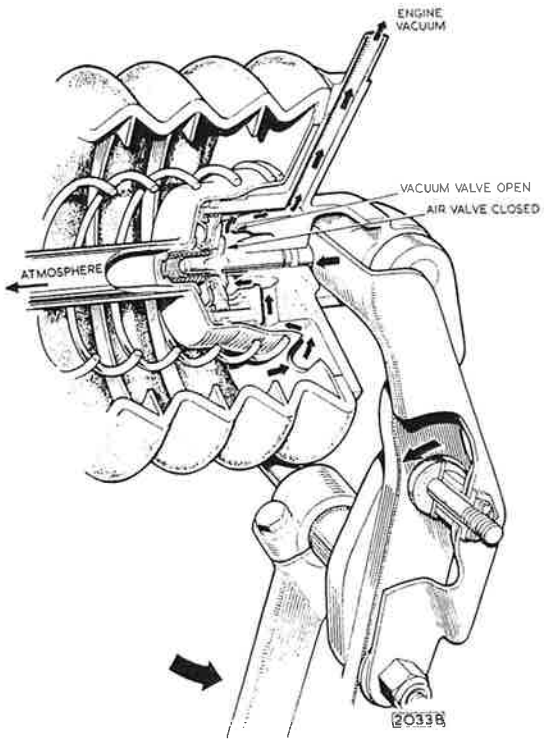

Fig. 25. Servo operation—Applying the brakes

3. Brakes Fully Applied. When the brakes are fully applied, and the servo is giving maximum assistance, any extra pedal pressure results in still greater increase of pressure to the master cylinder, through the combination of the pedal and power lever, acting as one through the eccentric, fully compressing the rubber collar, as shown in the diagram. The full assistance of the power unit is maintained during the increase.

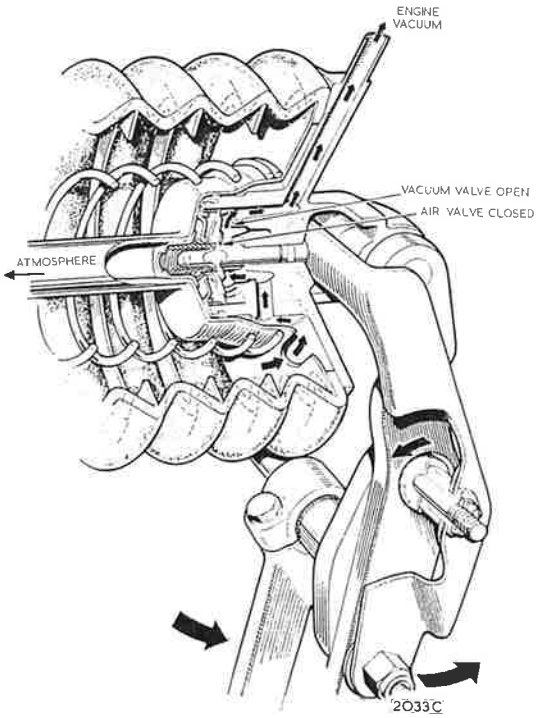

Fig 26. Servo operation—Brakes fully applied

4. Releasing the Brake. When the brakes are released, the trigger moves away from the air button, the vacuum is closed by spring tension and the air valve is re-opened. Air again enters the bellows, causing it to expand. At any point during the release the driver may hold the brakes, and the unit will immediately become poised. On complete release the servo regains the position shown in Fig. L. 24.

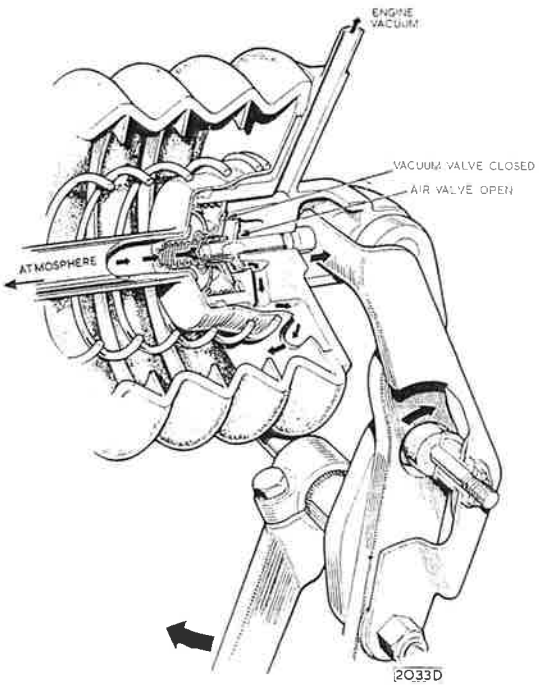

Fig. 27. Servo operation—Releasing the brakes

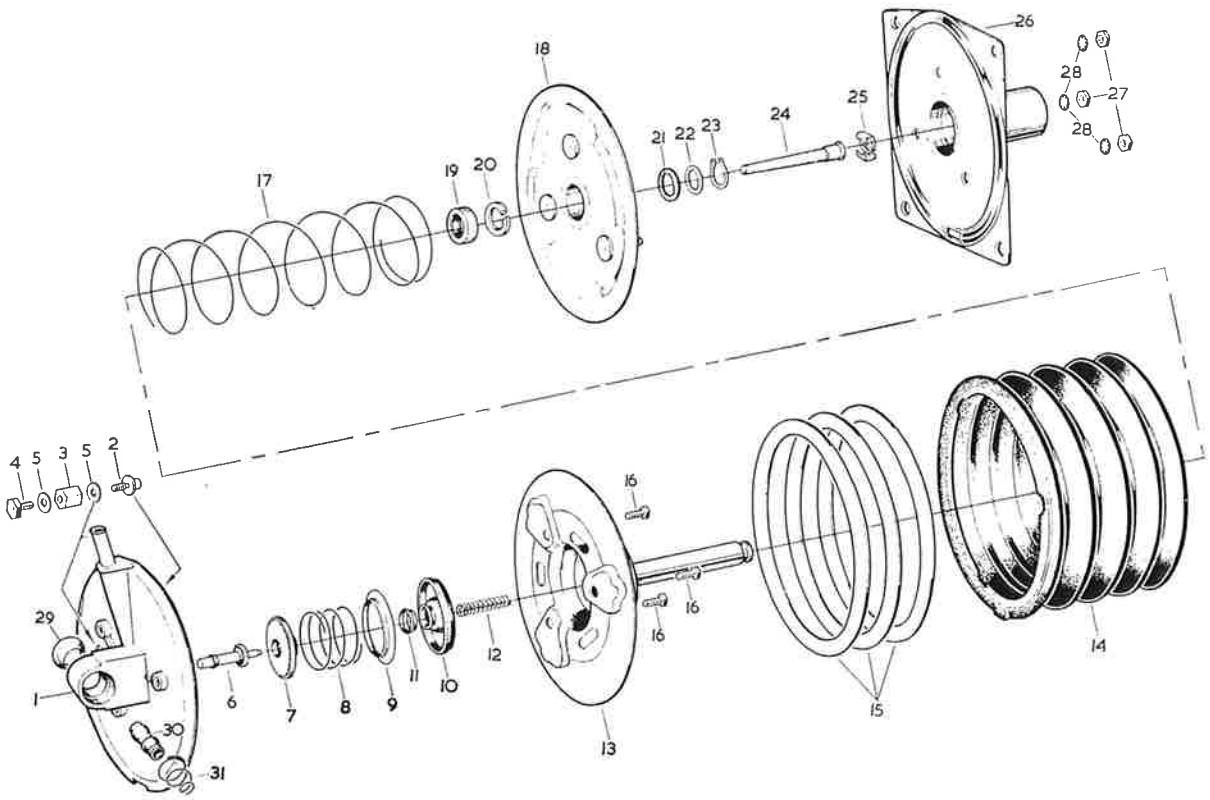

1. Valve housing
2. Nipple
3. Adaptor
4. Plug
5. Gasket
6. Air valve
7. Vacuum valve
8. Return spring
9. Balancing washer
10. Balancing diaphragm
11. Retainer
12. Control spring
13. Retainer sleeve
14. Bellows
15. Support ring
16. Bolt
17. Main return spring
18. Mounting hub
19. Seal
20. Guide sleeve
21. Rubber buffer
22. Stop washer
23. Circlip
24. Air filter
25. Baffle
26. Mounting plate
27. Nut
28. Lock washer
29. Nylon bush
30. Eccentric bush
31. Spring

Fig. 28. Exploded view of the vacuum servo

SERVICING THE UNIT

Symptom: Hard pedal; power assistance not operating.

Cause (1) Blocked, kinked or leaking vacuum line.

Remedy: Remove the rubber vacuum hose from the power unit and with the engine running check the vacuum source. Check that the valve unit in the reserve tank is operating correctly, replace if faulty, Fig. 21. Check that the hoses are not blocked, kinked or loosely connected. Replace or repair as necessary.

Note: Any vacuum leaks in the system can usually be located easily when the engine is running by a hissing sound.

Cause (2) Vacuum leaks in the unit.

Remedy: With the engine running and brake pedal pressure applied listen at the unit for a hissing sound indicating a vacuum leak. Locate and correct. If it is necessary to remove the unit see separate note on removal routine to be followed.

Cause (3) Valve adjusting eccentric out of adjustment.

(i) Connect a vacuum gauge (reading 0–30 ins. (0–76·20 cm.) of mercury) to the union on the valve housing, Fig. 29.

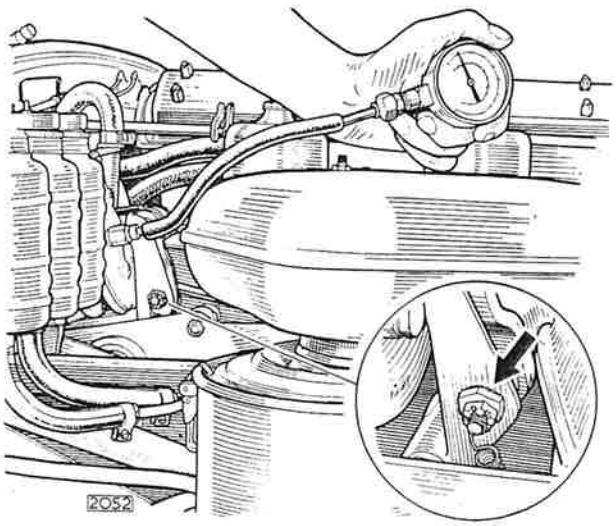

Fig. 29. Checking the servo with a vacuum gauge, Churchill tool No. J12—Gauge and Adaptor J12/1—Pipe and Adaptor, inset shows eccentric adjusting nut

Note: On early models the union will be found on the back mounting plate and on later models on the front auto-valve housing plate.

(ii) Run the engine and apply normal full pressure to the brake pedal. Gauge should now register 20 inches (50·8 cm.) of mercury. If no or only partial vacuum is registered it will be necessary to adjust the valve eccentric as follows:

Remedy: Remove the return spring and release the locknut, apply a spanner to the hexagon on the eccentric bush, Fig. 29, turn until required vacuum is obtained. This will be when the air valve is closed and the vacuum valve fully open. Tighten the locknut, apply the brakes and check. Release the pedal pressure completely; vacuum valve should now be closed and the air valve open with the gauge registering zero. Brakes should be free. If the brakes are not free this indicates that the vacuum valve is not completely closed. Release the locknut and adjust the eccentric in the opposite direction until the gauge registers zero and the brakes are free.

Note: Do not adjust the eccentric more than is necessary.
Re-tighten the locknut, and fit the return spring. Recheck by applying the brakes with the engine running. If the adjustment is now correct switch off the engine, remove the gauge and close the union.

Symptom: Slow return of the brake pedal.

Cause: Choked air filter.

Remedy: Remove the bellows unit from the car (for procedure see note headed "The Brake/Clutch Pedal Box Assembly Removal").
Hold the Pedal Box Assembly in a vice, use soft jaws and do not grip tightly, collapse the bellows by hand. This will expose the end of the air inlet tube with circlip attached. Remove the air intake baffle. The filter will now lift out, clean and dry thoroughly. Refit and replace the unit in the car, Fig. 22.

To Detach Bellows from Assembly

Proceed as described under "Dismantling the Brake Linkage" until the servo unit can be withdrawn.

Dismantling

Clamp the servo unit in a soft-jawed vice. Remove the three setscrews and shakeproof washers and remove the mounting bracket (26, Fig. 28).

Remove the air filter retaining baffle (25), withdraw the air filter (24).

Hold the mounting hub (18) down against the return spring (17). Remove the circlip (23), washer (22) and discard the rubber washer (21).

Holding the mounting hub down, remove the lip of the bellows (14) from the hub.

Remove the mounting hub and the return spring.

Remove the three self-locking setscrews, remove the guide sleeve (13) and bellows from the valve housing. Withdraw the guide sleeve from the bellows.

Remove the air valve control spring (12), the valve balancing diaphragm (10), the vacuum valve spring (8), vacuum valve assembly (7) and air valve assembly (6) from the valve housing (1).

Remove the valve balancing washer (9) and retainer (11) from the valve balancing diaphragm.

Discard the valve balancing diaphragm, the vacuum valve assembly and the air valve assembly.

Clean all metal parts except the mounting hub assembly but including the air filter in alcohol or other oil free solvent and dry with compressed air.

Important: The leather seal in the mounting hub assembly is filled with a silicone lubricant which must not be removed. If necessary the mounting hub should be cleaned with a dry cloth only.

Clean the bellows if necessary by washing in a mild soap and water solution after removing the three support rings.

Rinse in clean water and dry with compressed air.

Inspect all parts for wear or damage. All worn or damaged parts must be replaced.

If the vacuum valve seat in the vacuum valve housing is damaged the valve housing must be replaced.

Replace all parts listed below whether they show damage or not.

Replace the following:

	No. off	Fig.	No.
Rubber washer	1	(28)	21
Air valve assembly	1		6
comprising:			
Air valve			
Air valve buffer			
Air valve cup			
Air valve cap			
Vacuum valve assembly ..	1		7
Valve balancing diaphragm ..	1		10

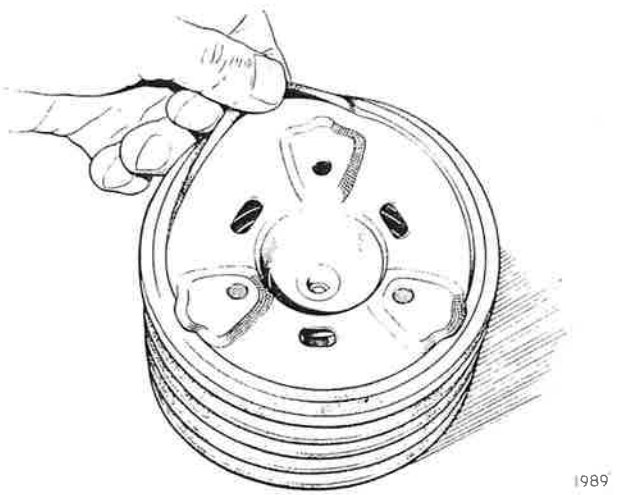

Fig. 30. Lining up the bosses on the retainer sleeve with the recesses on the bellows

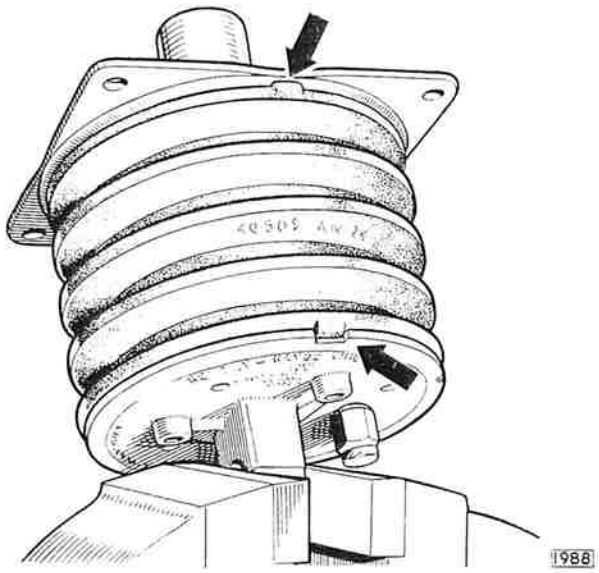

Fig. 31. Lining up the bosses on the bellows with the recesses on the mounting plate and valve housing

Reassembly

Re-assembly is the reverse of the dismantling procedure. It should be noted that when fitting the guide sleeve to the bellows the three bosses in the guide sleeve must line up with the three recesses in the bellows (Fig. 30). When fitting the valve housing to the bellows the boss on the bellows must line up with the recess in the valve housing. Similarly the cut-out in the mounting plate must line up with the boss on the bellows when attaching it to the mounting hub (Fig. 31).

When the unit is assembled, test the air valve by pressing the air valve cap down with the flat of a screw-driver. Two definite stages of movement should be felt and the valve should snap back readily.

SELF-ADJUSTING HANDBRAKES

Description

The self-adjusting handbrakes fitted to later models are attached to the rear brake caliper bodies but form an independent mechanically actuated system carrying its own friction pads. The handbrakes are self-adjusting to compensate for friction pad wear and automatically provide the necessary clearance between the brake discs and the friction pads.

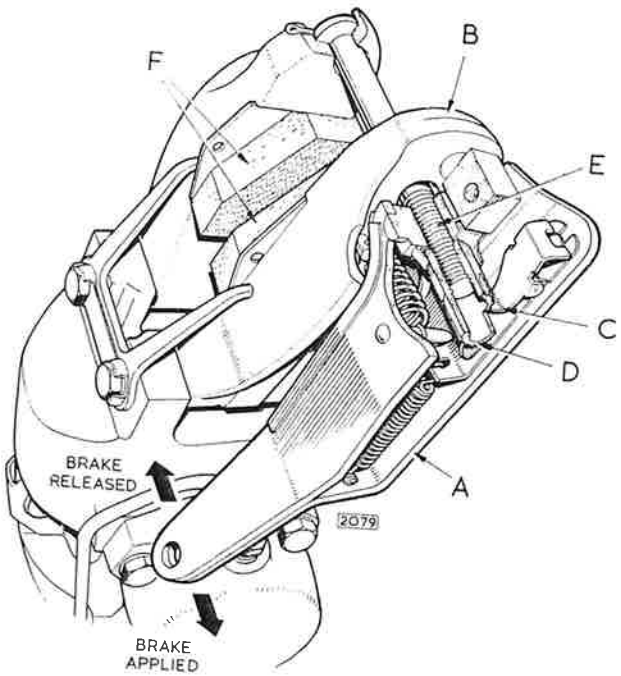

Fig. 32. Sectioned view of the adjusting mechanism.

BRAKES

Operation

When the handbrake lever in the car is operated, the operating lever (A, Fig. 1) is moved away from the friction pad carrier (B) and draws the friction pads (F) together. Under normal conditions, when the lever is released the pawl (C) in the adjusting mechanism returns to its normal position, thus the normal running clearance between the brake disc and the friction pads is maintained.

In the event of there being increased clearance, the pawl will turn the ratchet nut (D) on the bolt thread drawing the adjuster bolt (E) inwards and bringing the friction pads closer to the brake disc until the normal running clearance is restored.

Removal

With the car on a ramp, disconnect the handbrake compensator linkage from the handbrake operating lever at the front of the rear suspension assembly by discarding the split pin and withdrawing the clevis pin. Lift the locking tabs and remove the pivot bolts and retraction plate. Remove the friction pad carriers from the caliper bridge by moving them rearwards round the disc and withdrawing from the rear of the rear suspension assembly. Repeat for the second handbrake.

Dismantling

Remove the cover securing bolt, discard the split pin and withdraw the pivot clevis pin. Remove the dust cover and remove the split pin from the screwdriver slot in the adjusting bolt. Unscrew the adjusting bolt from the ratchet nut and withdraw the nut and bolt. Detach the pawl return spring and withdraw the pawl over the locating dowel. Detach the operating lever return spring and remove the operating lever and lower cover plate.

Assembling

Assembly is the reverse of the dismantling procedure.

Refitting

Refitting is the reverse of the removal procedure but the handbrake should be set as follows:—

With the split pin removed from the screwdriver slot in the adjusting bolt, screw the bolt in or out until there is a distance of $\frac{7}{16}''$ (11·1 mm.) between the friction pads, that is, the thickness of the disc plus $\frac{1}{16}''$ (1·5 mm.).

Refit the split pin and refit the caliper to the car.

Pull and release the operating lever at the caliper repeatedly when the ratchet will be heard to "click-over". Repeat the operation until the ratchet will not operate which will indicate that the correct clearance is maintained between the disc and the friction pads.

Reconnect the handbrake compensator linkage to the operating levers and check the cable adjustment as follows:—

Handbrake Cable Adjustment

Fully release the handbrake lever in the car. Slacken the locknut at the rear end of the handbrake cable.

Adjust the length of the cable by screwing out the threaded adaptor to a point just short of where the handbrake operating levers at the calipers start to move. Check the adjustment by pressing each operating lever at the same time towards the caliper; if any appreciable movement of the compensator linkage takes place the cable is too tight.

When correctly adjusted a certain amount of slackness will be apparent in the cable; no attempt should be made to place the cable under tension or the handbrakes may bind.

Printed in England by Buckler & Webb Ltd., Church Street, Birmingham 3

SECTION M

WHEELS AND TYRES

3·8 "E" TYPE
GRAND TOURING MODELS

INDEX

WHEELS AND TYRES

DESCRIPTION

Conventional tyres and tubes are fitted to "E" Type cars with wire spoke wheels as standard.

DATA

Road Wheels	
Type and Make	Dunlop—72 wire spoke
Fixing	Centre lock, knock on hub cap
Rim Section	5K
Rim diameter	15" (381 mm.)
Number of spokes	72
Tyres	
Make	Dunlop
Type	Conventional tyre and tube (RS.5)
Size	6·40 × 15"

Inflation Pressures (Dunlop R.S.5)	Front	Rear
Normal use up to maximum speed of 130 m.p.h. (210 k.p.h.)	23 lbs/sq. in. (1·62 kg./cm.²)	25 lbs/sq. in. (1·76 kg./cm.²)
For sustained high speeds and maximum performance	30 lbs/sq. in. (2·11 kg./cm.²)	35 lbs/sq. in. (2·46 kg./cm.²)
Inflation Pressures (Dunlop SP.41 HR 185 × 15)		
For speeds up to 125 m.p.h. (200 k.p.h.)	32 lbs/sq. in.	32 lbs/sq. in.
For speeds up to maximum	40 lbs/sq. in.	40 lbs/sq. in.

Note: The Dunlop SP.41 Tyre must not be used on "E" Type Cars unless the maximum speed is restricted to 125 m.p.h. (200 k.p.h.). Pressures should be checked when the tyres are cold, such as after standing overnight, and not when they have attained normal running temperatures.

WHEELS AND TYRES FOR RACING

Note that chrome-plated wheels are not recommended for use on cars which will be participating in serious competition work.

If it is desired to use 6·50 × 15 Road Racing tyres on the rear wheels for competition purposes, these tyres must be fitted to special wheels (Part No. C.18922) having a wider rim section and revised spoking, which maintains the normal clearance between the tyre and the wheel arch panel and results in the rear track being increased.

These special rear wheels must in no circumstances be used in the front wheel position on the "E" Type car. Also note that, since these wheels are recommended only for competition use, they will not be supplied chromium plated. Special rear wheels (Part No. C.18922) will be supplied only as spares and NOT as part of the specification of a new car.

It is recommended that, prior to and following participation in competition events covering racing or rallies, the wheels are checked to ensure that they are in an undamaged condition, are running true and that the spokes are correctly tensioned.

TYRES

The Dunlop Road Speed RS.5 tyres which are standard equipment on the "E" Type model give the best all round results for road use. It is not desirable that Road Racing tyres should be fitted to cars which will be used only on the road.

Racing Tyres

6·00 × 15 Dunlop R.5 Road Racing tyres should be fitted if "E" Type cars are being raced. If it is desired to fit larger section rear tyres to reduce the possibility of wheel spin under full power acceleration or to adjust the gear ratio, 6·50 × 15 Dunlop R.5. Road Racing tyres can be fitted, but only if these tyres are fitted on the special rear wheels described above.

Note that it is not desirable that cars should be run under normal touring conditions using Dunlop R.5 Road Racing tyres since, although these tyres give the best handling qualities under racing conditions, they do not have the same qualities for touring purposes as the Road Speed tyre, in addition to which the tyre walls are more liable to damage through "kerbing"

WHEELS AND TYRES

Tyre Pressures for Racing

Recommended tyre pressures for racing purposes are:—

45 p.s.i. front and rear, Cold
(3·2 kg/cm²)

Dependent upon temperature and maximum speed conditions these pressures should be raised to:—

50 p.s.i. front and rear, Cold
(3·5 kg/cm²)

The minimum tyre pressures for Dunlop R.5 Road Racing tyres if used for normal touring purposes are:—

30 p.s.i. front and rear, Cold
(2·1 kg/cm²)

TYRES—GENERAL INFORMATION

TYRES

Dunlop tyres (RS.5) Road Speed tyres have been specially designed for cars with the high speed range of the Jaguar "E" Type class.

When replacing worn or damaged tyres and tubes it is essential that tyres with exactly the same characteristics are fitted.

Due to the high speed performance capabilities of the Jaguar "E" Type it is important that no attempt is made to repair damaged or punctured tyres.

All tyres which are suspect in any way should be submitted to the tyre manufacturers for their examination and report. The importance of maintaining **all** tyres in perfect condition cannot be too highly stressed.

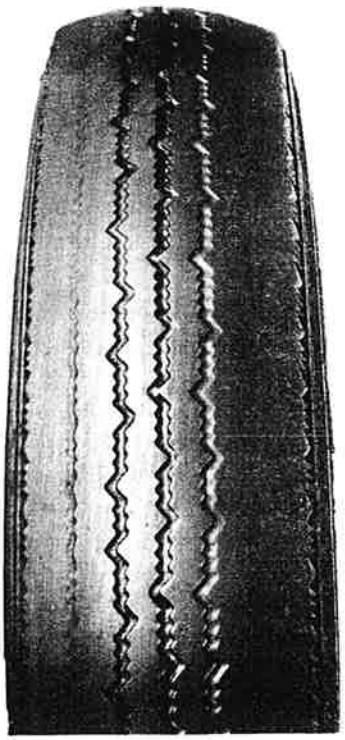

Fig. 1. Excessive tyre distortion from persistent under-inflation causes rapid wear on the shoulders and leaves the centre standing proud

Inflation Pressures

It is important to maintain the tyre pressures at the correct figures, incorrect pressures will affect the steering, riding comfort, and tyre wear.

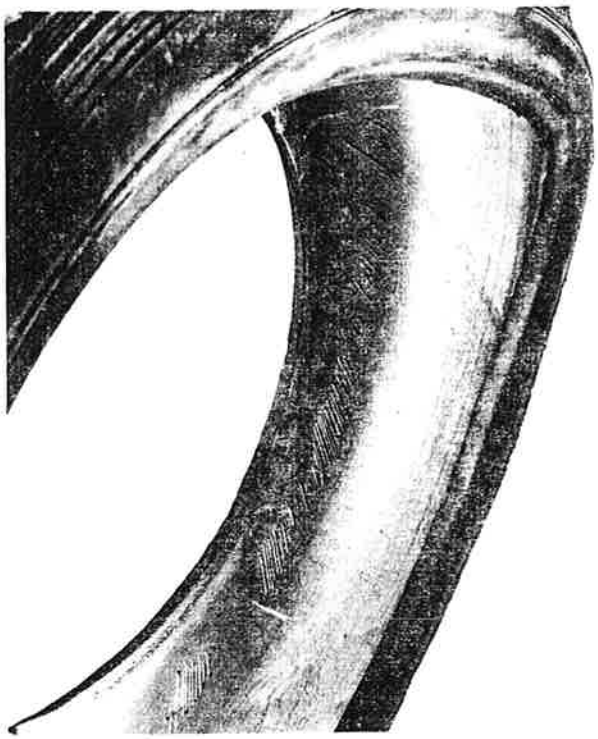

Fig. 2. Running deflated has destroyed this cover

Check the inflation pressures when the tyres are cold and not when they have attained their normal running temperature; tyre pressures increase with driving and any such increase should be ignored.

Always ensure that the valve caps are fitted to the end of the valve as they prevent the ingress of dirt and form a secondary seal to the valve core.

Valve Cores and Caps

Valve cores are inexpensive and it is a wise precaution to renew them periodically.

Valve caps should always be fitted and renewed when the rubber seatings have become damaged after constant use.

Tyre Examination

Examine tyres periodically for flints, nails, etc., which may have become embedded in the tread. These should be removed with a blunt screwdriver or a similar instrument.

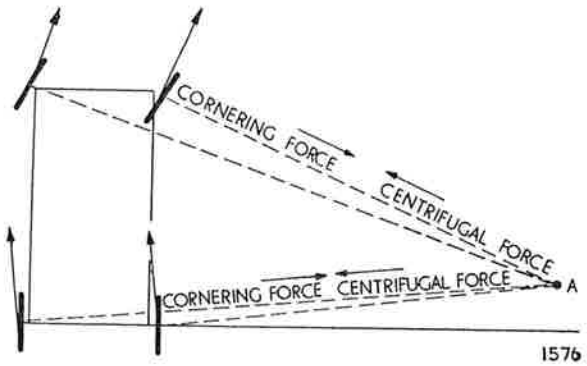

Fig. 3. Slip when cornering increases tyre wear

TYRE AND WHEEL BALANCE

Static Balance

In the interests of smooth riding, precise steering and the avoidance of high speed "tramp" or "wheel hop" all Dunlop tyres are balance checked to predetermined limits.

To ensure the best degree of tyre balance the covers are marked with white spots on one bead, and these indicate the lightest part of the cover. Tubes are marked on the base with black spots at the heaviest point. By fitting the tyre so that the marks on the cover bead exactly coincide with the marks on the tube, a high degree of tyre balance is achieved. When using tubes which do not have the coloured spots it is usually advantageous to fit the covers so that the white spots are at the valve position.

The original degree of balance is not necessarily maintained and it may be affected by uneven tread wear, by cover and tube repairs, by tyre removal and refitting or by wheel damage and eccentricity. The car may also become more sensitive to unbalance due to normal wear of moving parts.

If roughness or high speed steering troubles develop, and mechanical investigation fails to disclose a possible cause, wheel and tyre balance should be suspected.

A Tyre Balancing Machine is marketed by the Dunlop Company to enable Service Stations to deal with such cases.

Warning

If balancing equipment is used which dynamically balances the road wheels on the car, the following precaution should be observed.

In the case of the rear wheels always jack **both** wheels off the ground otherwise damage may be caused to the differential.

This is doubly important in the case of the "E" Type which is fitted with a Thornton "Powr-Lok" differential as in addition to possible damage to the differential, the car may drive itself off the jack or stand.

Dynamic Balance

Static unbalance can be measured when the tyre and wheel assembly is stationary. There is another form known as dynamic unbalance which can be detected only when the assembly is revolving.

There may be no heavy spot—that is, there may be no natural tendency for the assembly to rotate about its centre due to gravity—but the weight may be unevenly distributed each side of the tyre centre line. Laterally eccentric wheels give the same effect. During rotation the off set weight distribution sets up a totating couple which tends to steer the wheel to right and left alternately.

Dynamic unbalance of tyre and wheel assemblies can be measured on the Dunlop Tyre Balancing Machine and suitable corrections made when cars show sensitivity to this form of unbalance. Where it is clear that a damaged wheel is the primary cause of severe unbalance it is advisable for the wheel to be replaced.

TYRE REPLACEMENT AND WHEEL INTERCHANGING

When replacement of the rear tyres becomes necessary, fit new tyres to the existing rear wheels and, after balancing, fit these wheels to the front wheel positions on the car, fitting the existing front wheel and tyre assemblies (which should have useful tread life left) to the rear wheel positions on the car.

If at the time this operation is carried out the tyre of the spare wheel is in new condition, it can be fitted to one of the front wheel positions in preference to replacing one of the original rear tyres, which wheel and tyre then become the spare.

Note: Due to the change in the steering characteristics which can be introduced by fitting to the front wheel positions wheels and tyres which have been used on the rear wheel positions, interchanging of part worn tyres from rear to front wheel positions is not recommended.

WIRE SPOKE WHEELS
REPAIR AND ADJUSTMENT

DESCRIPTION

Dunlop 72 Cross-spoked wire wheels are fitted as standard to the Jaguar "E" Type and the following instructions are issued to assist in the repair and adjustment of the road wheels in the event of damage due to accident or from any other cause.

Cross-spoking refers to the spoke pattern, where the spokes radiate from the well of the wheel rim to the nose or outer edge of the hub shell, and from the tyre seat of the rim to the flanged or inner end of the shell (Fig. 5).

REMOVAL AND DISMANTLING

Detach wheel from car and remove tyre complete from wheel rim.

Remove spoke nipples and detach spokes from rim and centre.

Check wheel rims and centre; renew if damaged beyond normal repair.

Examine spokes and renew as necessary.

REBUILDING

Place the wheel centre and the rim on a flat surface with the valve hole upwards in the 6-o'clock position.

Note: All spoking operations commence in this position, and the valve hole is always the starting point for all rebuilding operations.

With the valve hole in the 6-o'clock position, fit one A, B, C, and D spoke to produce the pattern as shown in Fig. 4.

Having established the correct pattern remove the A and B spokes and proceed as follows:—

(1) Attach the D spoke to the rim, and screw up the nipple finger tight; leave the C spoke loosely fitted without a nipple attached.

(2) Attach all the D spokes with the nipples finger tight.

(3) Insert all the C spokes through the hub shell without nipples.

(4) Attach all the B spokes as paragraph 2 above.

(5) Attach all the A spokes as paragraph 2 above.

(6) Attach the nipples and finger tighten all C spokes.

(7) Tighten the two C spokes and the two D spokes on each side of the valve hole until the ends of the spokes are just below the slot in the nipple heads.

(8) Tighten the four C and D spokes diametrically opposed to the valve hole (12-o'clock position).

(9) Mark around the wheel until all the C and D spokes are similarly tightened.

(10) Follow with all A and B spokes as in paragraphs 7, 8 and 9 above.

(11) Work around the wheel with a spoke spanner and tighten all nipples until some resistance is felt. Diametrically opposed spokes should be tightened in sequence.

The wheel is now ready for trueing and adjustment.

TRUEING

Wheels can be out of truth in a lateral or radial direction, or in a combination of both.

As a general rule, lateral out of truth should be corrected first.

The wheel to be trued must be mounted on a free-running trueing stand before any adjustment can be carried out.

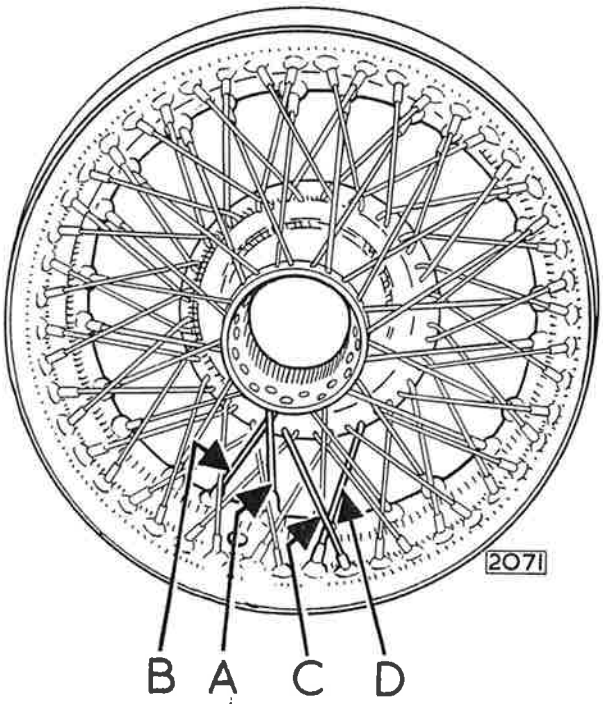

Fig. 4. Showing the spoking arrangement

Lateral Correction

Mount the wheel on the trueing stand. Spin the wheel, and holding a piece of chalk near the wall of the rim flange, mark any high spots. Tighten the A and B spokes in the region of the chalk marks and slacken the C and D spokes in the area.

Note: Throughout the trueing operations, no spoke should be tightened to such an extent that it is impossible to tighten it further without risk of damage. If any spoke is as tight as it will go, all the other spokes should be slackened.

Radial Correction

When lateral out of truth has been corrected, spin the wheel on the trueing stand, and, with the chalk, mark the high spots on the horizontal tyre seat. Tighten **all** spokes in the region of the chalk marks, or if the spokes are on the limit of tightness, slacken all the remaining spokes.

CHECKING FOR "DISH"

The term "dish" defines the lateral dimension from the inner face of the flanges of the wheel centre to the inner edge of the wheel rim. To check "dish" place straight edge across the inner edge of the wheel rim and measure the distance to the inner face of the wheel centre flange (Fig. 5). This dimension should be $3\frac{7}{16}'' \pm \frac{1}{16}''$ (87·3 mm. ± 1·58 mm.).

Adjustment for "Dish"

If the "dish" is in excess of the correct dimension $3\frac{7}{16}'' \pm \frac{1}{16}''$ (87·3 mm. ± 1·58 mm.) tighten all A and B spokes, and slacken all C and D spokes by a similar amount.

When the "dish" dimension is less than the given tolerance slacken all A and B spokes and tighten all C and D spokes by a similar amount.

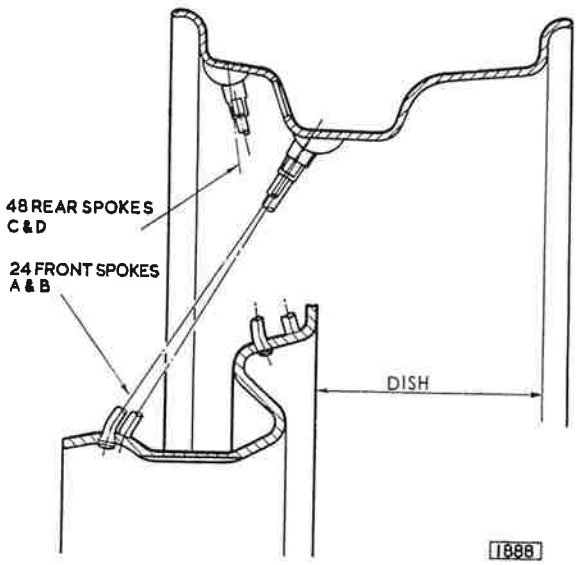

Fig. 5. Location for measuring the dish and the "A," "B," "C," and "D" spokes

It will be necessary after completing the "dish" adjustments to repeat the lateral and radial trueing procedure until the wheel is not more than ·060″ (1·5 mm.) out of truth in either direction.

It is important that after the wheel trueing operation is completed that all spokes should be tensioned uniformly, and to a reasonably high degree.

Correct tension can be closely estimated from the high pitched note emitted when the spokes are lightly tapped with a small hammer.

If a spoke nipple spanner of the torque recording type is used, a normal torque figure should be in the order of 60 lb.in. (0·7 kgm.).

Printed in England by Buckler & Webb Ltd., Church Street, Birmingham 3